**THOMSON** MULTI MEDIA

*Brandt* FERGUSON SABA **TELEFUNKEN** **THOMSON**

TV

# SERVICE MANUAL
# DOCUMENTATION TECHNIQUE
# TECHNISCHE DOKUMENTATION
# DOCUMENTAZIONE TECNICA
# DOCUMENTACION TECNICA

# RP C19 100 Hz 4/3 - 16/9

Addition to SM 350 645 90
Additif au SM
Ergänzung zum SM
Aggiornamento del SM
Suplemento al SM

IC19 B5KA08P004 —
M5MA0BP104
M5MA08P004

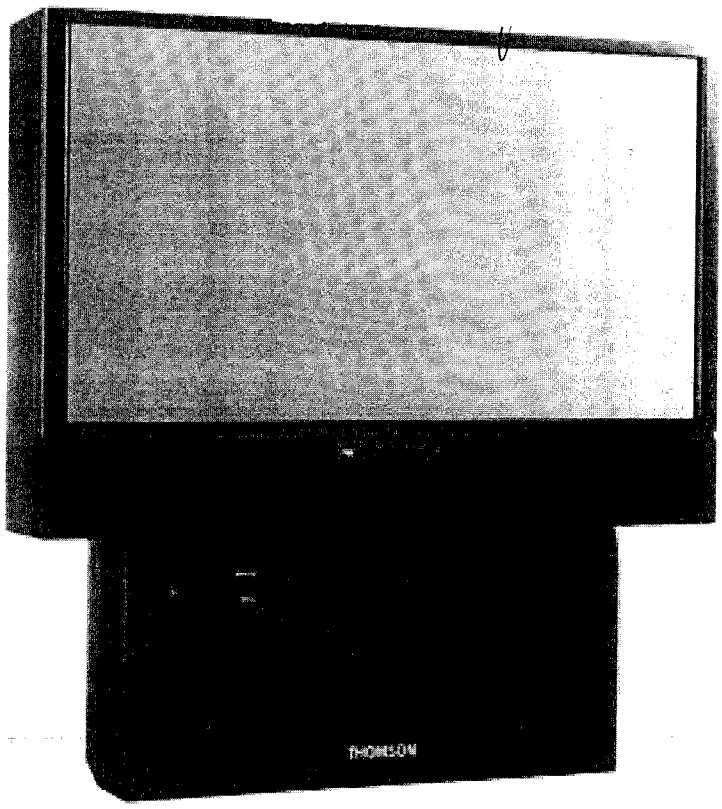

**WARNING :** *Before servicing this chassis read the safety recommendations.*
**ATTENTION :** *Avant toute intervention sur ce châssis, lire les recommandations de sécurité.*
**ACHTUNG :** *Vor jedem Eingriff auf diesem Chassis, die Sicherheitsvorschriften lesen.*
**ATTENZIONE :** *Prima di intervenire sullo chassis, leggere le norme di sicurezza.*
**IMPORTANTE :** *Antes de cualquier intervención, leer las recomendaciones de seguridad.*

**Code : 350 896 40** - 0799 / 8.5M - RPC19 Print. ROSSEELS PRINTING : 01 53 01 11 11

No copying, translation, modification on other use authorized. All rights reserved worldwide. • Tous droits de reproduction, de traduction, d'adaptation et d'exécution réservés pour tous les pays. • Sämtliche Urheberrechte an diesen Texten und Zeichnungen stehen uns zu. Nachdrucke, Vervielfältigungen - auch auszugsweise - nur mit unserer vorherigen Zustimmung zulässig. Alle Rechte vorbehalten. • I diritti di riproduzione, di traduzione, e esecuzione sono riservati per tutti i paesi. • Derechos de reproduccion, de traduccion, de adaptacion y de ejecucion reservados para todos los paises.

⚠ Do not disconnect modules when they are energized!
Repairs on power supply section are to be carried out only with isolating transformer.

Ne pas retirer les modules lorsqu' ils sont sous tension. N'effectuer les travaux de maintenance sur la partie reliée au secteur (Switch Mode) qu'au travers d'un transformateur d'isolement.

Module nicht bei eingeschaltetem Gerät entfernen!
Servicearbeiten am Netzteil nur unter Verwendung eines Regeltrenntrafos durchführen.

Non scollegare le piastre quando sono alimentate!
Per le riparazioni sulla sezione alimentatore, utilizzare un trasformatore isolatore.

No desconectar los módulos cuando están activados. Las reparaciones en la sección de alimentación de energía deben ser ejecutadas solamente con un transformador de separación.

⚠ Indicates critical safety components, and identical components should be used for replacement. Only then can the operational safety be garanteed.

Le remplacement des éléments de sécurité (repérés avec le symbole ⚠ ) par des composants non homologués selon la Norme CEI 65 entraine la non-conformité de l'appareil. Dans ce cas, la responsabilité du fabricant n'est plus engagée.

Wenn Sicherheitsteile (mit dem Symbol ⚠ gekennzeichnet) nicht durch Original - Ersatzteile ersetzt werden, erlischt die Haftung des Herstellers.

La sostituzione dei componenti di sicurezza (evidenziati con il segno ⚠ ) con componenti non omologati secondo la norma CEI 65 comporta la non conformitá dell'apparecchio. In tal caso è "esclusa la responsabilità " del costruttore.

La sustitución de elementos de seguridad (marcados con el simbolo ⚠ ) por componentes no homologados segun la norma CEI 65, provoca la no conformidad del aparato. En ese caso, el fabricante cesa de ser responsable.

## MEASUREMENT CONDITIONS - CONDITIONS DE MESURES - MESSBEDINGUNGEN
## CONDIZIONI DI MISURA - CONDICIONES DE MEDIDAS

**RECEIVER :**
On UHF,input level : 1 mV, bar test pattern :
- PAL, I standard. 100% white.

Via the scart socket, input level : 1 Vpp, bar test pattern :

Colour, contrast and brightness at mid-position, sound at minimum.
Programme selected : PR 01.

DC voltages measured between the point and earth using a digital voltmeter.

**RECEPTEUR :**
En UHF, niveau d'entrée 1 mV mire de barres
- SECAM, Norm L, Blanc 100%.

Par la prise Péritélévision, niveau d'entrée 1 Vcc, mire de barres .

Couleur, contraste, lumière à mi-course, son minimum.
Programme affecté PR 01.

Tensions continues relevées par rapport à la masse avec un voltmètre numérique.

**EMPFÄNGER :**
Bei UHF Eingangspegel 1 mV, Farbbalken :
- PAL, Norm G, Weiss 100%.

Über die Scartbuchse : Eingangspegel 1 Vss, Farbbalken :

Farbe, Kontrast, Helligkeit in der Mitte des Bereichs, Ton auf Minimum.
Zugeordnetes Programm PR 01.

Gleichspannungen mit einem digitalen Voltmeter zur Masse gemessen.

**RICEVITORE :**
In UHF, livello d'entrata 1 mV, monoscopio barre :
- PAL, norma G. bianco 100%.

Via SCART, livello d'entrata 1 Vpp, monoscopio barre :

Colore, Contrasto, Luminosità media, Suono minimo.
Programma selezionato PR 01.

Tensioni continue rilevate rispetto alla massa con un voltmetro digitale.

**RECEPTOR :**
En UHF, nivel de entrada 1 mV, mira de barras :
- PAL, norma G, blanco 100%.

Por la toma Peritelevision, nivel de entrada 1 Vpp mira de barra.

Color, Contraste, luz a mitad de carrera, Sonido mínimo.
Programa afectado PR 01.

Tensiones continuas marcadas en relacion a la masa con un voltimetro digital.

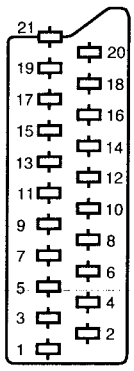


**NOTE :** (MAIN) *... etc. identifies each* pcb module.

**NOTE :** (MAIN) *... etc. repères des platines constituant l'appareil.*

**HINWEIS :** (MAIN) *... usw. Kennzeichnung der Platinen, aus denen das Gerät zusammengesetzt ist.*

**NOTA :** (MAIN) *... ecc. sigla delle piastre dell' apparecchio.*

**NOTA :** (MAIN) *... etc. marcas de las placas que constituyen el aparato.*

| | | ENGLISH | FRANÇAIS | DEUTSCH | ITALIANO | ESPAÑOL |
|---|---|---|---|---|---|---|
| 1 | ⊖ | AUDIO "R" | AUDIO "D" | AUDIO "R" | AUDIO "D" | AUDIO "D" |
| 2 | ⊕ | AUDIO "R" | AUDIO "D" | AUDIO "R" | AUDIO "D" | AUDIO "D" |
| 3 | ⊖ | AUDIO "L" | AUDIO "G" | AUDIO "L" | AUDIO "S" | AUDIO "I" |
| 4 | ⊥ | AUDIO | AUDIO | AUDIO | AUDIO | AUDIO |
| 5 | ⊥ | "BLUE" | "BLEU" | "BLAU" | "BLU" | "AZUL" |
| 6 | ⊕ | AUDIO "L" MONO | AUDIO "G" MONO | AUDIO "L" MONO | AUDIO "S" MONO | AUDIO "I" MONO |
| 7 | ⊕ | "BLUE" | "BLEU" | "BLAU" | BLU | AZUL |
| 8 | ⊕ | SLOW SWITCH | COMMUT. LENTE | AV UMSCHALTUNG | "COMMUTAZIONE LENTA" | "CONMUTACION LENTA" |
| 9 | ⊥ | "GREEN" | "VERT" | "GRÜN" | "VERDE" | "VERDE" |
| 10 | NC | | | | | |
| 11 | ⊕ | "GREEN" | "VERT" | "GRÜN" | "VERDE" | "VERDE" |
| 12 | NC | | | | | |
| 13 | ⊥ | "RED" | "ROUGE" | "ROT" | "ROSSO" | "ROJA" |
| 14 | NC | | | | | |
| 15 | ⊕ | "RED" | "ROUGE" | "ROT" | "ROSSO" | "ROJA" |
| 16 | ⊕ | FAST SWITCH | COMMUT. RAPIDE | AUSTASTUNG | "COMMUTAZIONE RAPIDA" | "CONMUTACION RAPIDA" |
| 17 | ⊥ | VIDEO | VIDEO | VIDEO | VIDEO | VIDEO |
| 18 | ⊥ | FAST SWITCH | COMMUT. RAPIDE | AUSTASTUNG | "COMMUTAZIONE RAPIDA" | "CONMUTACION RAPIDA" |
| 19 | ⊖ | VIDEO | VIDEO | VIDEO | VIDEO | VIDEO |
| 20 | ⊕ | VIDEO OR "SYNC" | VIDEO SYNCHRO | VIDEO ODER SYNCHRO | VIDEO O SINCRO | VIDEO O SINCRO |
| 21 | ⊖ | PLUG SCREEN BOX | BLINDAGE PRISE | ABSCHIRMUNG DES STECKERS | INVOLUCRO METALLICO DELLA PRESA | BLINDAJE DEL ENCHUFE |

⊕ : INPUT - ENTRÉE - EINGANG - ENTRATA - ENTRADA • ⊖ : OUTPUT - SORTIE - AUSGANG - USCITA - SALIDA • ⊥ : EARTH - MASSE - MASSE - MASSA MASA

# INFORMATION - INFORMATIONS - INFORMATIONEN - INFORMAZIONE - INFORMACIONES

## CHASSIS DESIGNATION - DESIGNATION DES CHASSIS -BEZEICHNUNG DES CHASSIS - DESCRIZIONE DEI TELAI - DESIGNACIÓN DE LOS CHASIS

(GB) The reference numbers mentioned on the front cover,lists the chassis covered by this technical documentation.
Printed on the chassis back the identification label is the chassis reference number.

(F) Les références indiquées en couverture donnent la liste des chassis traités dans le présent document.
La référence spécifique au récepteur est reportée sur la plaque signalétique arrière du chassis.

(D) Die genaue Chassisbezeichnung befindet sich auf dem Typenschild auf der Rückseite des Chassis

(I) I riferimenti indicati in copertina forniscono la lista dei telai trattati nel presente documento.
La descrizione di un telaio specifico installato sul ricevitore e'indicata sulla targhetta delle caratteristiche situata sulla parte posteriore dell'apparecchio.

(E) Las referencias indicadas en la cubierta dan la lista de los chasis tratados en el presente documento.
La designación de un chasis específico que equipa el receptor se inscribe en la placa del fabricante, situada en la parte trasera del aparato.

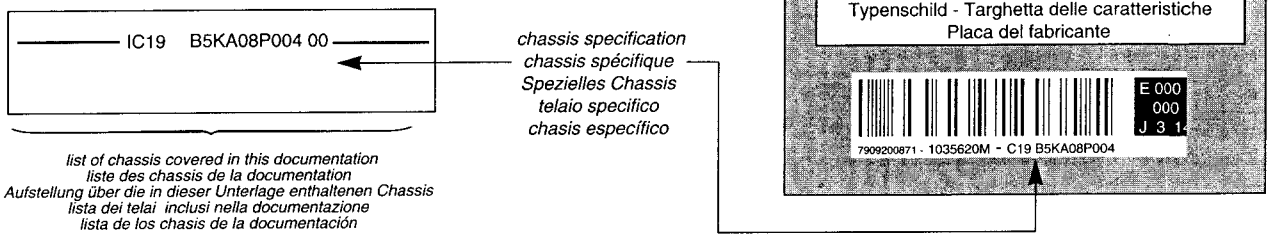


## RECEIVER COMPOSITION - COMPOSITION DES RECEPTEURS - BESTÜCKUNG DER EMPFÄNGER - COMPOSIZIONE DEI RICEVITORI - COMPOSICIÓN DE LOS RECEPTORES

Chassis identification table:
1- Main chassis identification code
2- Chassis and module configuration index page number listing.
3- Chassis configurations contained in this documentation

Le tableau ci-dessous regroupe :
1- La désignation des chassis
2- L'environnement électronique de chaque chassis (modules) et le numéro de page où il est décrit.
3- L'association chassis-environnement composant les récepteurs décrits dans la présente documentation.

Die nachfolgendeTabelle beinhaltet:
1 - Die Chassisbezeichnung
2 - Die elektrischen Baugruppen (Module) der Chassis und die Seitenzahl auf der sie abgebildet sind.
3 - Die Chassis und Module der Empfänger aus dieser Dokumentation.

La tabella qui di seguito contiene:
1 - La descrizione dei telai
2 - La configurazione di ogni telaio (moduli) e il numero di pagina nella quale è descritto
3 - L'abbinamento telaio-struttura che compone i ricevitori descritti nella presente documentazione

El cuadro siguiente agrupa:
1 - La designación de los chasis
2 - El entorno electrónico de cada chasis (módulos) y el número de página donde está descrito.
3 - La asociación chasis - entorno que compone los receptores descritos en la presente documentación

### RP C19 - 4/3

| DESCRIPTION | BLOCK DIAGRAM | WIRING DIAGRAM | FITTING INSTRUCT. | ADJUST-MENTS | PCB MAIN | SCHEMA MAIN | CRT MODULE | SUB RGB ABL | VM MODULE | AUDIO MODULE | DCU MODULE | PIP DVT | SCI MODULE | PS MODULE | HF KB/FCB |
|---|---|---|---|---|---|---|---|---|---|---|---|---|---|---|---|
| IC19 B5KA08P004 | 5 to 8* | - | 13 to 14* 16 | 15 to 24* 15 to 21 | 22 to 27 | 28 to 34 | 35 to 39 | 40 41 | 42 to 46 | 52 to 56 | 57 to 64 | - 68-69 | 73 to 75 | 76 to 79 | 80* 82 to 83* |

### RP C19 - 16/9

| DESCRIPTION | BLOCK DIAGRAM | WIRING DIAGRAM | FITTING INSTRUCT. | ADJUST-MENTS | PCB MAIN | SCHEMA MAIN | CRT MODULE | SUB RGB ABL | VM MODULE | AUDIO MODULE | DCU MODULE | PIP DVT | SCI MODULE | PS MODULE | HF KB/FCB |
|---|---|---|---|---|---|---|---|---|---|---|---|---|---|---|---|
| IC19 M5MA0BP104 | 5 to 8 | 9 to 12 | 13 to 14* 16 | 15 to 24* 15 to 21 | 22 to 27 | 28 to 34 | 35 to 39 | 40 41 | 47 to 51 | 80 to 83 | 57 to 64 | 65-72 | 73 to 75 | 76 to 79 | 80*/84 85 to 87 |
| IC19 M5MA08P004 | 5 to 8(**) | 13 to 14 | 13 to 14* 16 | 15 to 24* 15 to 21 | 22 to 27 | 28 to 34 | 35 to 39 | 40 41 | 47 to 51 | 52 to 56 | 57 to 64 | 65-72 | 73 to 75 | 76 to 79 | 80*/84 85 to 87 |

* Please refer to RP C19 100 Hz 4/3 Service Manual Part N° 350 645 90
* Se référer à la documentation technique de base RP C19 100 Hz 4/3 code : 350 645 90
* Bitte schlagen Sie im RP C19 100 Hz 4/3 Service Manual 350 645 90 nach
* Consultare la documentazione tecnica del telaio RP C19 100 Hz 4/3, codice: 350 645 90
* Referirse a la documentación básica del RP C19 100 Hz 4/3, código : 350 645 90

** Audio : Virtual Dolby Module

# BLOCK DIAGRAM - SCHEMA SYNOPTIQUE - BLOCKSCHALTBILD - SCHEMA A BLOCCHI - ESQUEMA DE BLOQUES
## RP C19 - DOLBY PRO-LOGIC - PIP

ICC19 - CHASSIS MAIN BOARD

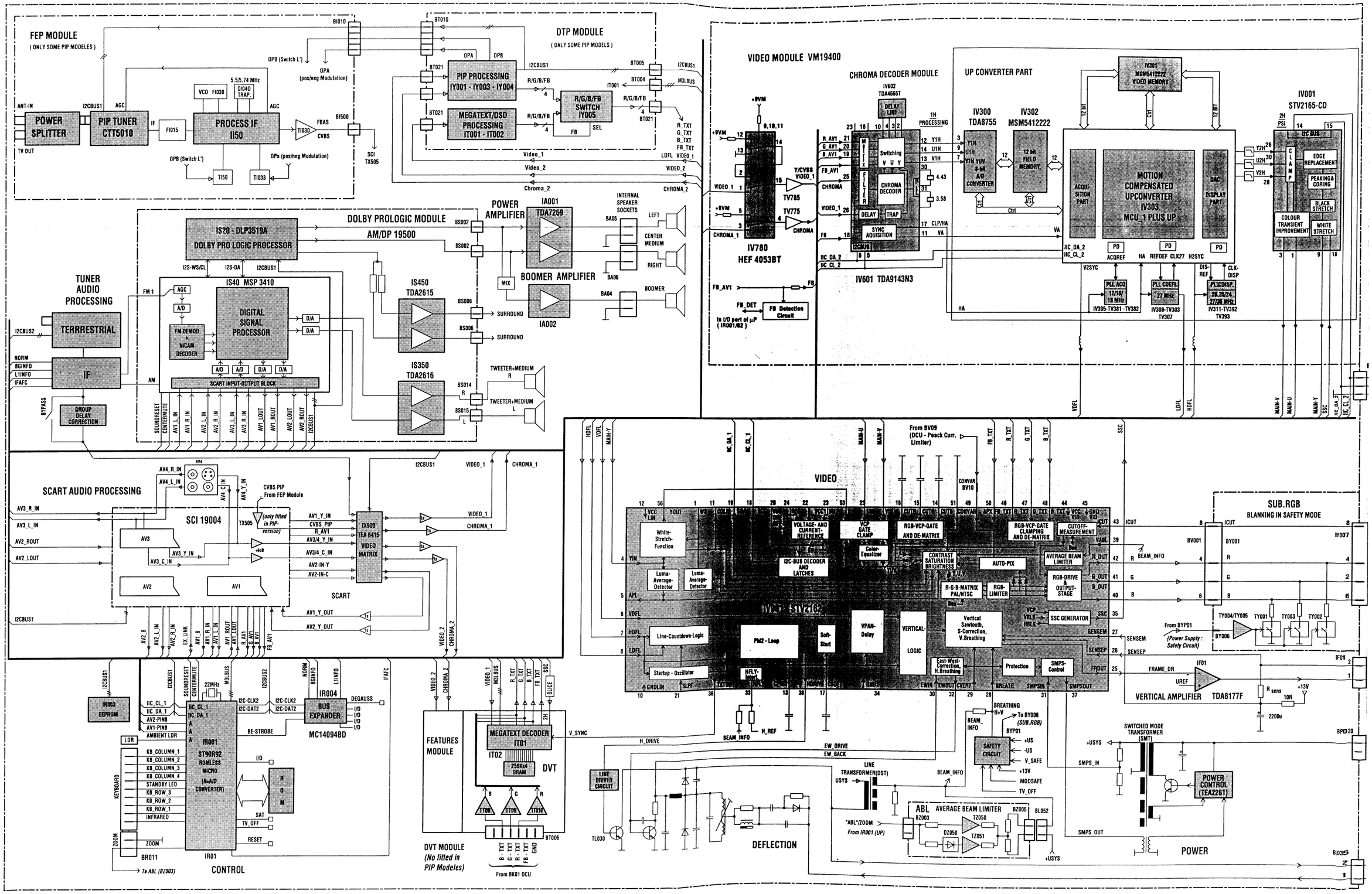

IV001
STV2165-CD

2H PSI
I2C BUS
CLAMP
EDGE REPLACEMENT
PEAKING & CORING
BLACK STRETCH
WHITE STRETCH
COLOUR TRANSIENT IMPROVEMENT
WHITE STRETCH
Y2H
U2H
V2H
MAIN-V
MAIN-U
MAIN-Y
SSC
I²C_DA_2
I²C_CL_2

DIGITAL CONVERGENCE UNIT

HFB
VPSE
H - PULSE SHAPER
MEMORY IK08 / IK15
SCLM
SDAM
PORA to BSVM 0M / OFF (DV09)
UNDER VOLTAGE WATCHDOG TK03/TK04
PWRS
From Power Supply PS ( BP 208 )
WDG
+5V
GND
+15V
GND
-15V
GND
-47V
+47V
BK04
+12V
-12V
SIGNAL GENERATOR
IK01
STV2040
SYNV
SYNH
SCLS
SDAS
VIDR VIDG VIDB VBLK
DACF
DARH
DARV
DAGH
DAGV
DABH
DABV
IK02 BUFFER VPAR
FILTER VPAR CK06/KK06/CK31
VPARA ( to Dyn. Focus )
BUFFER RH IK02
FILTER RH CK45/LK87/CK44
DRH
RH
BUFFER RV IK02
FILTER RV CK55/LK87/CK56
DRV
RV
BUFFER GH IK02
FILTER GH CK46/LK83/CK47
DGH
GH
BUFFER GV IK02
FILTER GV CK58/LK09/CK59
DGV
GV
BUFFER BH IK02
FILTER BH CK48/LK05/CK51
DBH
BUFFER BV IK02
FILTER BV CK61/LK11/CK62
DBV
BV
PIN
KEY
VERTICAL PIN AND KEY PRE - CORRECTION
IP02 - RP ...
VPR1
VPR2
IA10
PRE AMPL. RH
POW. AMPL. RH
PRE AMPL. RV
POW. AMPL. RV
IG11
PRE AMPL. GH
POW. AMPL. GH
PRE AMPL. GV
POW. AMPL. GV
IB12
PRE AMPL. BH
POW. AMPL. BH
PRE AMPL. BV
POW. AMPL. BV
RVE
GVE
BVE
SIGNAL ADDING
+12V -12V
+47V
-47V
+15V
-15V
BR01
RHD
RHR
RVD
RVR
BG01
GHD
GHR
GVD
GVR
BB01
BHD
BHR
BVD
BVR
BK10
BR010
SCL
SDA
GND
BK01
To BT006 DVT
B - TXT
G - TXT
R - TXT
FB - TXT
GND
BUFFER GRID - VIDEO
TK20 - TK22 - TK24 - TK26
G - MAC
GND
R - TXT
G - TXT
B - TXT
GND
SCL
SDA
BK07

3 X CRT : CRT G - CRT B - CRT R
CRT - VIDEO AMPLIFIER
BM*02
USYST
GND
+26V
BM*01
+26V
GND
USYST
BSVM PULSE GENERATION
BSVM POWER OUTPUT
USYST
CURRLIM
BSVM DEFLECTION COIL
HTR
HTRG
HEATER
CONV.
ANODE
CATHODE
G1
G2G3
AQU
BK*11
HTRG
HTR
GND
BSVM
DCR
*BIAG
VIDEO
+12V
+250V
VIDEO DELAY
VIDEO AMPLIFIER
BIAS
CURRENT SENSE
DCR
VIDEO
BM*10
G1
SPOT KILLER AND AUXILIARY COMPONENTS
FOK
G2
BK*05
BLUE GAMMA CORRECTION
R*,G
+250V

SUB.RGB
BLANKING IN SAFETY MODE
BY007
ICUT
R
G
B
TY001
TY003
TY002
BF01
VPR1
VSAW
R sens
10R
2200u
+13V
BP020
BL035
BV05 (DCU)
BV04
BSVM
ICUT
GND
VIDB
GND
VIDR
GND
VIDG
+13V
BP05
VPR1
VSAW
V - PULSE GEN. CV41-RV55 DV17-CV43
VPSE
BLUE GAMMA SAMPLE & HOLD PULSE FORMER TS01-2-3-4
BLUE GAMMA DC - LEVEL TV04 - DV04
PEAK LEVEL CLIPPER TV20 - DV02
VIDB1
BSVM
+13V
*SIGNAL DISTRIBUTING ( to BK11 - CRT G / B / R )
BV03 B
BV01 R
BV02 G
HTRG
HTR
GND
BSVM
GND
VID*
+13V
+250V
+ 250V SUPPLY CURRENT WATCHDOG
PEAK CURR. LIMITER DV07/21/28 TV11/14/08/07
BV09
TO MAIN BV10 CONVAR.
DEFLECTION HORIZONTAL
TO H-Pulse Shaper (22/IK01)
HFB
BV12, 13, 14/B
HDEFL1
HDEFL2
BL035 MAIN
BV05
VPR1 ( from VERTICAL PIN AND KEY PRE - CORRECTION )
VPR2 ( to VERTICAL PIN AND KEY PRE - CORRECTION )
DEFLECTION SPLITTING VERTICAL
VPR2
BV12, 13, 14/A
RP50...RP55
VPR1
BV16
1KV
+5V
+12V
-15V
PWR SUPPLY PRECHARGING
-12V +15V +13V
VPARA ( from Filter VPAR )
DYN. FOK. TV10
PORA (from 9/IC01)
BSVM ON / OFF DV00
+1KV GENERATOR RV45 DV18 - DV19
G2R
G2G
G2B
BG06
to G2 (R,G,B) CRT BK05
BV06
+250V
HTR
HTRG
SAFE

POWER SUPPLY CONVERGENCE PS
SECONDARY VOLTAGES
SMT LP250
-47V
BP260
-15V
+15V
+47V
SUPPLY (DCU - BK04)
SMOOTHING CAPACITORS CP206-CP210
RP210... RP213 START-UP
RECTIFIER DP201
BP203
MIS
BP202
BP201
CP201 LP201 CP202
POWER STAGE TP220
DRIVER CIRCUIT DP218 - DP219
FOLDBACK POINT CORRECTION RP240 - DP240
SOFTSTART-CIRCUIT RP243 - DP243
FROSIN-CONTROL DP231 - DP232
TON-MIN-CONTROL RP232 - CP231/CP232
OVERVOLTAGE PROTECTION CIRCUIT DP235 - DP237
SWITCH-OFF CIRCUIT TP222-TP223
SMPS ON/OFF TP230
VOLTAGE REGULATION TP270
+5V
DCU SAFE
SAFETY CIRCUIT TP271
OPTO COUPLER IP250
BP208

# WIRING DIAGRAM - SCHEMA D'INTERCONNEXIONS - VERDRAHTUNGSPLAN - DIAGRAMMA DELLE INTERCONNESSIONI - ESQUEMA DE INTERCONEXIONES

## RP C19 - 16/9 - DOLBY - PRO LOGIC - PIP

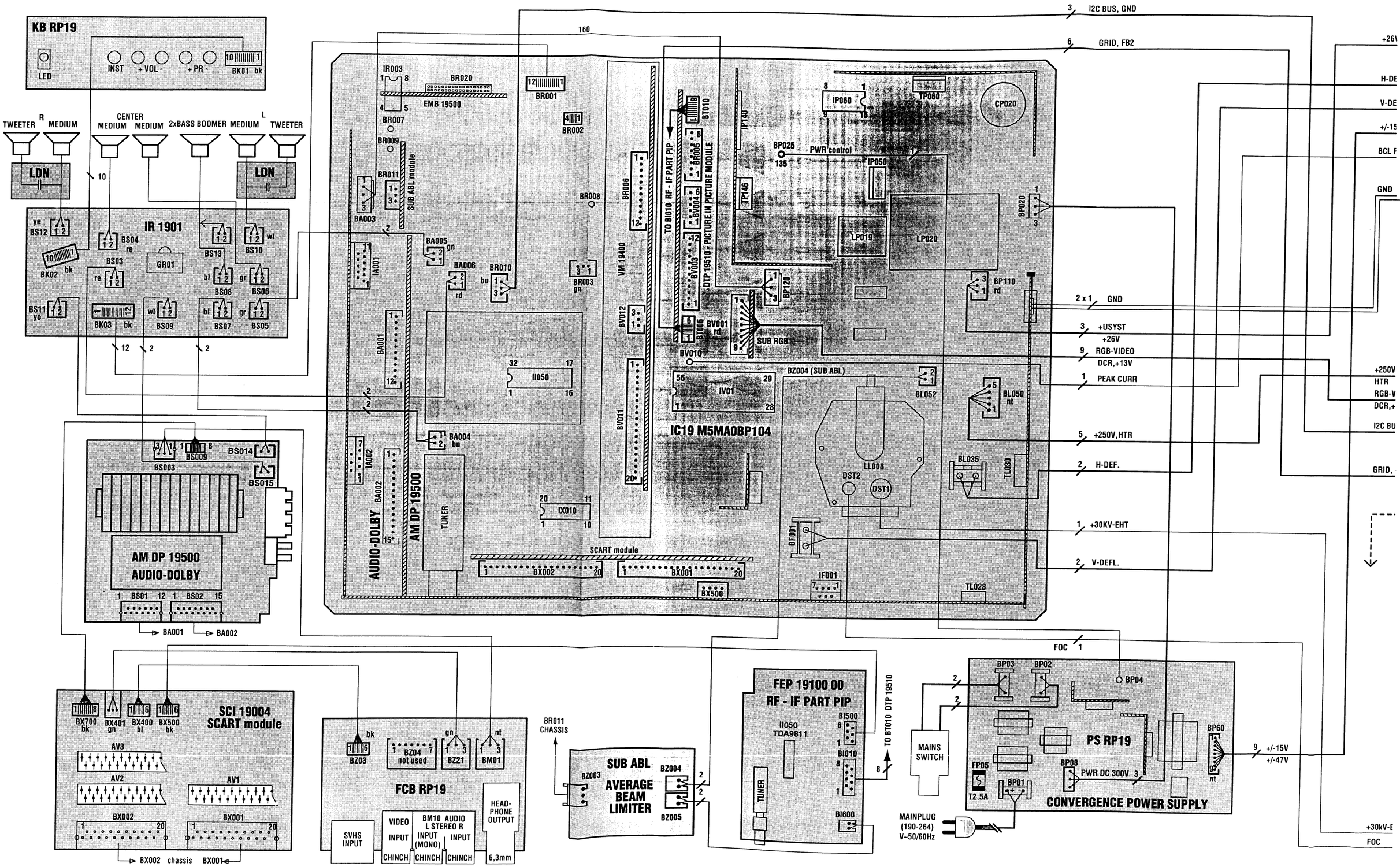

# ADJUSTMENTS - REGLAGES - EINSTELLUNGEN - REGOLAZIONE - AJUSTES

| | | | | |
|---|---|---|---|---|
| U Sys | SERVICE MODE | Standard TV - Settings :<br>☼ + ◑ + ◑ = 50%<br>TV to AV1 : Black test pattern | V= DP 110 | TUBE NAME: RP - 4/3, RP - 16/9 / DESCRIPTION: 4/3 46" - 52", 16/9 46" - 52" / Usys jumper: JP915 / Usys: 134V +/- 0.5V |

| | |
|---|---|
| CONVERGENCE POWER SUPPLY<br>VIDEO-LEVEL ALIGNMENT<br>H - VCO<br>VERTICAL POWER STAGE ZERO | * Please refer to RP C19 100Hz 4/3 Service Manual Part N° 350 645 90<br>* Se référer à la documentation technique de base RPC19 100Hz 4/3 code : 350 645 90<br>* Bitte schlagen Sie im RPC19 100 Hz 4/3 Service Manual 350 645 90 nach<br>* Consultare la documentazione tecnica del telaio RPC19 100 Hz 4/3, codice: 350 645 90<br>* Referirse a la documentación básica del RPC19 100 Hz 4/3, código : 350 645 90 |

U G2 - DEFLECTION YOKE POSITION - CENTERING MAGNETS

*To gain access to the Red, Green and Blue G2 Controls, Deflection Yokes or the Adjustment Magnets, proceed as follows :*
*- Using a suitable screwdrive push the front panel fixing button in the direction shown ( Fig 1).*
*- Carrefully pull down the front panel and remove it as shown and store safely.*

*Pour accéder aux réglages de G2 Rouge, Vert et Bleu , aux déviateurs ainsi qu'à leur aimant de réglages, appuyer en vous aidant d'un tournevis sur l'ergot de maintien du coffret de face avant dans le sens de la flèche et rabattre puis déposer le coffret (Fig.1).*

*Um Zugang zu den G2-Einstellern (Rot, Grün, Blau), Ablenkeinheiten und Abgleichmagneten zu erhalten*
*- drücken Sie mit einem passenden Schraubendreher den Besfestigungsknopf der Frontabdeckung in die angegebene Richtung (Fig.1).*
*- ziehen Sie die Frontabdeckung vorsichtig nach unten und entfernen sie wie angegeben.*

*Per accedere alle funzioni controlli G2 Rosso, Verde e Blu, giogo di deflessione e regolazione magneti, procedere come indicato:*
*con un apposito cacciavite, premere i tasti di fissaggio del pannello frontale come indicato nella figura (Fig.1).*
*Piegare il pannello con cura e fissarlo come descritto.*

*Para tener acceso a los ajustes G2 del Rojo, Verde y Azul, así como a los Yugos de Deflexións y a sus imanes de ajuste, proceder como sigue:*
*- Utilizando un destornillador adecuado, empujar el botón de fijación del panel frontal en el sentido indicado en la Fig.1.*
*- Tirar hacia abajo con cuidado del panel frontal y retirarle como se muestra en la figura.*

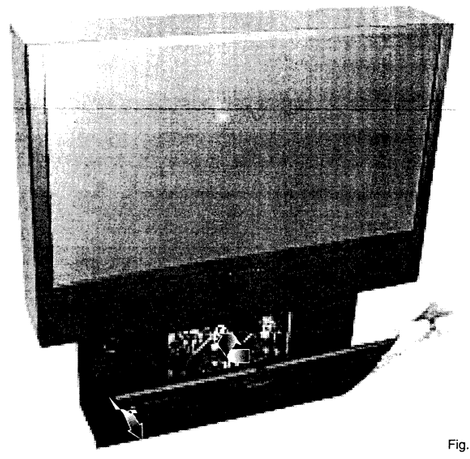

Fig.1

| | | | | |
|---|---|---|---|---|
| CRT<br>U G2<br>METHOD 1<br>Measurment method | G2 potentiometer<br>G2 Red : PV101<br>G2 Blue : PV201<br>G2 Green : PV301 | Standard TV - Settings :<br>☼ + ◑ + ◑ = 50%<br>TV to AV1 : Black test pattern | CRT<br>G2 ⊙ pot.<br>Oscillo.<br>video<br>Collector TK103<br>(radiator)<br>CRT.G,R,B RP 19.00 | CRT<br>1 - Adjust VG2 CRT. R : V= 180V<br>V<br>2 - Repeat for : CRT G , CRT B. |
| METHOD 2<br>Cutoff counter method<br>SERVICE MODE | SERVICE MODE | Standard TV - Settings :<br>☼ + ◑ + ◑ = 50%<br>No test pattern<br>( generated by internal text processor). | SERVICE MODE<br>Call up VIDEO alignment menu<br>Adjust R-Cut off and G-Cut-off to 80H temporary<br>Select G2 Alignment in Service Mode<br>Adjust the 3 G2 Pot. on 3 CRT Boards for R=28; G=28; B=28<br>Select "Restore" in Service Mode and press "OK" to restore the cut-off values. | |

| | |
|---|---|
| DEFLECTION YOKE POSITION<br>MAGNETIC CENTERING<br>OF GREEN RED BLUE PICTURE<br>FOCUS<br>DIGITAL CONVERGENCE UNIT | * Please refer to RP C19 100Hz 4/3 Service Manual Part N° 350 645 90<br>* Se référer à la documentation technique de base RPC19 100Hz 4/3 code : 350 645 90<br>* Bitte schlagen Sie im RPC19 100 Hz 4/3 Service Manual 350 645 90 nach<br>* Consultare la documentazione tecnica del telaio RPC19 100 Hz 4/3, codice: 350 645 90<br>* Referirse a la documentación básica del RPC19 100 Hz 4/3, código : 350 645 90 |
| GEOMETRY adjustments | See adjustment in Service Mode ( GEOMETRY Menu )<br>Siehe Abgleich im Service Mode ( GEOMETRY Menü ) |
| COLOUR adjustments | See adjustment in Service Mode ( VIDEO Menu )<br>Siehe Abgleich im Service Mode ( VIDEO Menü ) |
| CONVERGENCE<br>KONVERGENZ<br>CONVERGENZA<br>CONVERGENCIA | * Please refer to RP C19 100Hz 4/3 Service Manual Part N° 350 645 90<br>* Se référer à la documentation technique de base RPC19 100Hz 4/3 code : 350 645 90<br>* Bitte schlagen Sie im RPC19 100 Hz 4/3 Service Manual 350 645 90 nach<br>* Consultare la documentazione tecnica del telaio RPC19 100 Hz 4/3, codice: 350 645 90<br>* Referirse a la documentación básica del RPC19 100 Hz 4/3, código : 350 645 90 |





| | | | | |
|---|---|---|---|---|
| IF Alignment<br>VCO<br>Standard BG | FI030 | Switch set to standard BG<br>IF Signal<br>38.9 MHz (BG)<br>30 mV<br>G 75Ω<br>PIP TUNER<br>11<br>NH002 | V= RI077<br>AFC<br>23 II050 | Adjust FI30 for 2,5VDC +/-0.1V |
| TUNER-AGC | PI050 | Signal<br>210.25 MHz<br>3 mV<br>G 75Ω<br>TV set<br>Antenna input PIP Tuner | 11/NH002<br>IF output Tuner<br>Spectrum Analizer | Adjust PI050 : Maximum level<br>Reduce level with PI50 about 10dB. |

## GEOMETRIE / CONVERGENCE ADJUSTMENT - GEOMETRIE / REGLAGES DES CONVERGENCES / GEOMETRIE / KONVERGENZ ABGLEICH - GEOMETRIA / REGOLAZIONE CONVERGENZA - GEOMETRIA / AJUSTE DE CONVERGENCIA

* Please refer to RP C19 100Hz 4/3 Service Manual Part N° 350 645 90. For RPC19 16/9 adjust only the 16/9 Mode.
* Se référer à la documentation technique de base RPC19 100Hz 4/3 code : 350 645 90. Pour les RPC19 16/9 seul le mode 16/9 est à régler.
* Bitte schlagen Sie im RPC19 100 Hz 4/3 Service Manual 350 645 90 nach. For RPC19 16/9 adjust only the 16/9 Mode.
* Consultare la documentazione tecnica del telaio RPC19 100 Hz 4/3, codice: 350 645 90. For RPC19 16/9 adjust only the 16/9 Mode.
* Referirse a la documentación básica del RPC19 100 Hz 4/3, código : 350 645 90 . For RPC19 16/9 adjust only the 16/9 Mode.

## SCREENS REMOVAL - DEPOSE DES ECRANS - AUSBAU DES BILDSCHIRMES - RIMOZIONE SCHERMI - RETIRADA DE LAS PANTALLAS

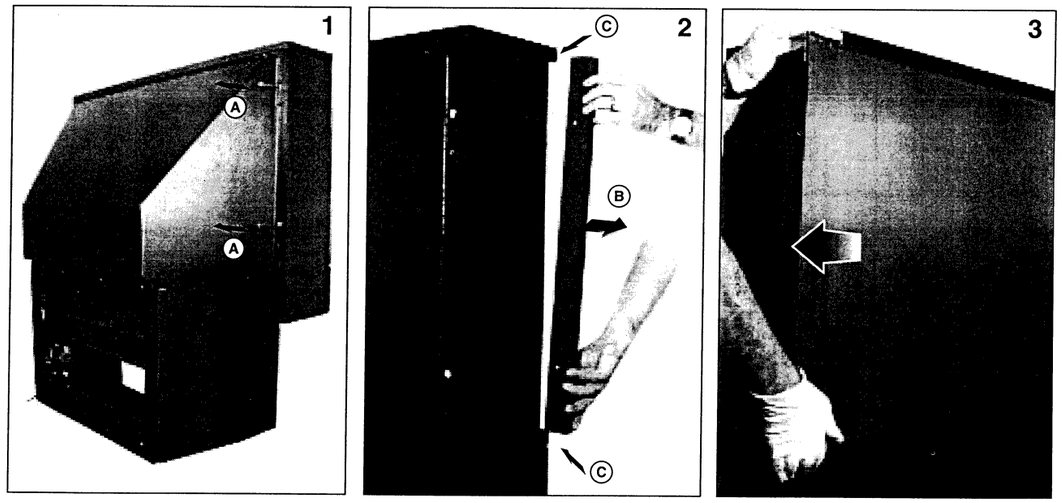


- Remove the two securing screws Ⓐ and the screens retaining rail Ⓑ. Next remove the two securing clamps Ⓒ.
- Remove both screens simultaneously to avoid scratching the plastic screens.

To prevent damage or leaving fingerprints on the screen we suggest the wearing of cotton gloves , these are available under Code **35088640**.
**Please Note**: Before refitting the new screen, remove the transit covers in order to correctly engage the two screens in the slot.

- Enlever les vis Ⓐ et dégager la règlette de maintien Ⓑ. Retirer les cales Ⓒ.
- Prendre les deux écrans simultanément et les glisser ensemble pour ne pas les rayer. Pour éviter toute empreinte sur l'écran nous suggérons de mettre des gants de coton, disponibles sous le code **35088640.**

**Note**: Pour le remontage retirer le cache arrière de l'appareil pour repositionner correctement les écrans dans leur rainure.

- Entfernen Sie die beiden Befestigungsschrauben Ⓐ und die Halteschiene Ⓑ. Entfernen Sie dann die Sicherungsklammern Ⓒ.
- Ziehen Sie die beiden Scheiben des Bildschirms, um Kratzer zu vermeiden, zusammen heraus.

Um Beschädigungen und Fingerabdrücke auf dem Bildschirm zu verhindern, tragen Sie möglichst Baumwollhandschuhe. Diese sind unter der Best.-Nr. **35088640** erhältlich.
**ACHTUNG**: Um die beiden Scheiben des Bildschirms bündig in die Führungsschienen zu bekommen, entfernen Sie vor dem Einbau den Transportschutz vom neuen Bildschirm.

- Rimuovere le due viti di sicurezza Ⓐ e la barra di fissaggio schermo Ⓑ e poi rimuovere i fissaggi di sicurezza Ⓒ.
- Togliere entrambi gli schermi contemporaneamente per evitare di danneggiare gli schermi di plastica.

Per non danneggiare lo schermo o lasciare impronte si consiglia l'uso di guanti di cotone, disponibili con il codice **35088640**.
**NB**: Rimuovere le guide per riposizionare correttamente lo schermo.

- Retirar los tornillos de seguridad Ⓐ y el listón de sujeción de las pantallas Ⓑ. A continuación retirar las dos fijaciones de seguridad Ⓒ.
- Retirar ambas pantallas simultaneamente para evitar que se arañen.

para evitar daños o huellas dactilares en la pantalla, se sugiere utilizar guantes de algodón ( Código **35088640** ).
**Nota**: Antes de colocar la nueva pantalla, retitar los protectores al objecto de acoplar correctamente las dos pantallas en la ranura.

# ALIGNMENT PROCEDURE - PROCESSUS DE REGLAGES - ABGLEICH - VISUALIZZAZIONE DEL VALORE DI REGOLAZIONE - PROCEDIMIENTO DE ALINEACION

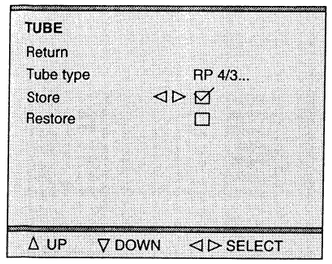


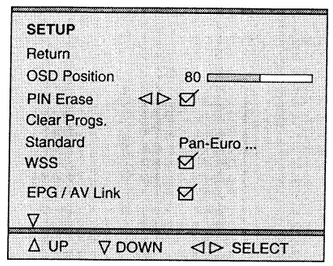


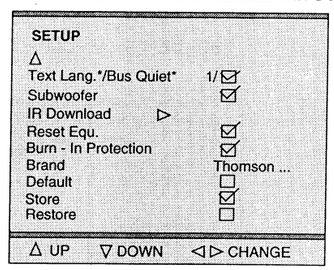


*according to model

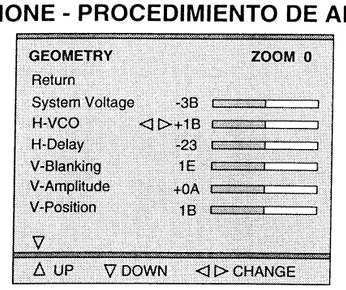


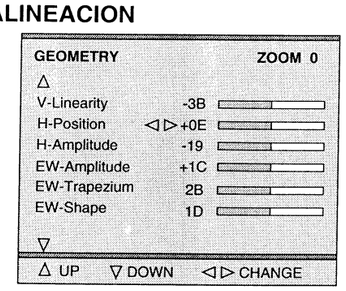


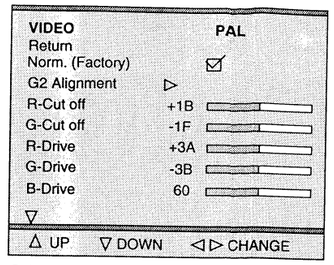

*Test Bar pattern used : 4/3 with geometric circle. Adjust separate for 4/3 and 16/9 format. See annexed . Color standard or RGB is autodetected and displayed opposit*

## TUBE

**Return**
Closes the sub-menu and returns to the "Main Service Menu"

Retourne au menu principal.

Schließt das Untermenü, und das Servicemodus-Menü erscheint.

Chiude il sottomenu e fa apparire il menu principale Field Service Mode.

Cierra el submenú. El menú Field Service Mode aparece.

Press </> on the RCU or Vol. +/- on projectors front panel.

**Tube type**

After replacing the NVM, the correct tube type number must be entered .
Once entered, the tubes geometry and video default values are immediately activated.
Variable geometry and video parameters are written to the NVM when the "STORE" line is selected. See below the tube type number list.

Definit le tube exact après changement de NVM.
Les nouvelles valeurs de tubes (avec video et géometrie) sont actives de suite.
Les paramètres de vidéo et de géométrie sont chargés en NVM lorsque STORE est sélectionné. Voir liste ci-dessous.

Nach Tausch des NVM den Bildröhrentyp (6 Ziffern) auswählen. Die neuen Geometrie- und Video-Defaultwerte werden sofort aktiv.
Variable Geometrie- und Videowerte werden durch Speichern mit "STORE" ins NVM geschrieben.
Bildrohrauflistung : siehe unten.

Scegliere il tubo appropriato dopo aver sostituito la NVM; i 6 caratteri che indicano il nuovo tipo di tubo, richiamano i valori video e geometria di default. I parametri per video e geometria vengono caricati nella NVM

Definir el tubo correcto después de haber cambiado el NVM.6 caracteres.Los nuevos valores de tipo de tubo (con el vídeo y la geometría por defecto) se activan inmediatamente. Los parámetros variables de geometría y vídeo se graban en el NVM al seleccionar la función Store. Vea más abajo la lista de tubos.

List :
4/3; 16/9.
- Tube type **RP 4/3 : RP C19 4/3**
- Tube type **RP 16/9 : RP C19 16/9**

➞ After setting ➞ Store (+) ☑

## SETUP

**Return**
Closes the sub-menu and returns to the "Main Service Menu"
Retourne au menu principal.
Schließt das Untermenü, und das Servicemodus-Menü erscheint.
Chiude il sottomenu e fa apparire il menu principale Field Service Mode.
Cierra el submenú. El menú Field Service Mode aparece.
Press </> on the RCU or Vol. +/- on project.front panel

**OSD Position**
Adjusts the position of all Megatext OSD..

**PIN Erase** Erases all PINs.
☑ PIN active ☐ No PIN active
Selection : Long press:
Press </>/OK: RCU or Vol. +/- :proj.front panel
Automatically stored.

**Clear Prog.**
Clears all programms stored in memory and resets all Picture and Sound settings to the factory defaults. The AUTO INSTALL (out of factory) mode can be initialised by a long press (>2.5s.) of the selection button.

Efface tous les programmes mémorisés. valeurs SON et IMAGES: valeurs usines.
Pour sortir des valeurs usine :
Selection : Long press (2,5s) sur la touche de sélection </>.

Löscht alle Programmplätze und setzt alle Bild- und Toneinstellungen auf Fabrikwerte zurück.
Der AUTO-INSTALL-Modus kann durch einen langen Knopfdruck (>2,5s) initialisiert werden.

Clear Prog.
Cancella tutti i programmi in memoria e regola i Valori analogici SUONO IMMAGINE: alivelli di fabbrica. Riportare il TV al modo Selezione: pressione prolungata: 2,5 sec.

Programa de borrado.
Borra todos los programas almacenados en la memoria.Valores analógicos de IMAGEN y SONIDO: valores de fábrica.Regreso a la TV para "salir del modo fábrica".Selección: Presión larga igual a 2,5 s.

**Standard** "Pan-Euro" or "I".
BG PAL SECAM,L SECAM (France),
DKK' SECAM,NTSC M,I PAL (UK/IRELAND)

**WSS**
Automatic detection of DOLBY surround sound and 16/9 format pictures via Teletext line number 23 is valid on all programmes.

Détection automatique du son surround DOLBY et du format 16/9 via la ligne 23 du Télétexte. Valide pour tous programmes.

WSS (nur bei 16:9 oder Dolby)
Auswertung der Zeile 23 zur automatischen Format-und Dolbyumschaltung.

Identificazione "auto-surround" e "format" via televideo alla riga 23.La selezione di WSS Processing vale per tutti i programmi.

Detección "auto-surround" y "format" a través de la línea 23 de Teletext.La selección del procesamiento WSS es válida para todos los programas.

☑ Detection enable ☐ Detection disable

**EPG / AV Link**
Enables or disables the option to decode and display EPG program data.

Validation ou inhibition du décodage/affichage des données du programme EPG.

Zulassen oder Nichtzulassen von EPG.

Abilita o disabilita l'opzione di decodifica e visualizzazione dati programmi EPG.

Valida o inhibe la opción de descodificación y visualización de datos del programa EPG.

☑ Available ☐ Not available

## SETUP

**Text. Lang.** Teletext language :

| 0 | 1 | 2 | 3 |
|---|---|---|---|
| English | Polish | English(US) | English |
| German | German | German | German |
| Swedish | Swedish | Swedish | Swedish |
| Italian | Italian | Italian | Italian |
| French | French | French | French |
| Portug. | Serbocroat | Portug. | Portug. |
| Czech/Slov. | Czech/Slov. | Czech/Slov. | Turkish. |
| - | Rumanian | English(UK). | - |

**Bus Quiet**

In bus quiet, the NVM can be read, modified and reprogrammed by means of a NVM Programmer.
To access "Bus quiet" : Long press ">".
The TV should remain in "Bus quiet" mode until either Exit, Left, Right, Up,Down or Standby keys on the RCU or local keyboard are pressed; at which point the TV should carry out a warmstart in order to prevent differences between the NVM and RAM contents.
After returning from bus quiet, the software check the NVM content.
If it is not valid, the software perform a new default writing of the NVM content.

En mode bus quiet la NVM peut être lue, modifiée et reprogrammée.
Accès au mode Bus quiet :
Longue pression ">".
Utiliser l'une des touches Exit, Gauche, Droite Haut, Bas, standby ou une des touches du clavier pour sortir le téléviseur du mode bus quiet.
A partir de ce point de sortie le démarrage du téléviseur s'effectue à chaud pour éviter toute différence des contenus RAM et NVM.
En sortie de mode bus quiet, le logiciel contrôle le contenu de la NVM.
S'il n'est pas correct le logiciel exécute une nouvelle écriture par défaut de celle-ci.

Im "Bus Quiet"-Modus kann der Inhalt des NVM mittels eines externen NVM-Programmiergerätes ausgelesen, geändert oder neu programmiert werden. "Bus Quiet" wird einem längeren Druck auf ">" aktiviert.
Das Gerät bleibt solange im "Bus Quiet" - Mode, bis durch Druck auf die EXIT-, LINKS-, RECHTS-, HOCH-, RUNTER- oder STANDBY-Taste (am Gerät oder auf der Fernbedienung) ein Warmstart des Gerätes veranlaßt wird, um unterschiedliche Daten in RAM und NVM zu vermeiden.
Es folgt ein Software-Check des NVM-Inhaltes.
Sollte dieser nicht gültig sein, wird der Inhalt mit Default-Werten überschrieben.

In Modo Bus Quiet, la memoria NVM può essere letta, modificata o riprogrammata.
Per accedere al modo Bus Quiet premere a lungo il tasto ">".
Il TV dovrebbe rimanere in modo Bus Quiet fino a che vengono premuti i tasti Exit, o Destro Sinistro, Su o Giù o Standby dal telecomando o dalla tastiera locale; a questo punto il TV dovrebbe ripartire per evitare interferenze tra i contenuti della memoria NVM e della RAM.
All'uscita dal modo Bus Quiet, il software controlla il contenuto della memoria NVM. Se tale contenuto non è valido, il software provvede a una nuova programmazione della NVM con l'inserimento dei dati di default.

En bus quieto, la NVM puede ser leída, modificada y reprogramada.
Acceso a bus quieto : Larga presión en ">"
El TV permanecerá en bus quieto hasta que se pulse cualquiera de las teclas siguientes: Exit, "<", "Y", "/", ">"o Standby del telemando o del teclado.
En este momento el TV arrancará para evitar cualquier diferencia entre los contenidos de la RAM y NVM.
Al salir del modo bus quieto, el software comprueba el contenido de la NVM.
Si no coincide, el software ejecuta la escritura de los datos en la NVM.

☑ Bus quiet enable ☐ Bus quiet disable

## SETUP

**Subwoofer**
Enable the subwoofer on equiped set.
Validation du Subwoofer sur les appareils équipés .
Einschalten des Subwoofers (wenn vorhanden).
Abilita il subwoofer negli apparecchi eqipaggiati.
Validaciónde que existe el subwoofer.
☑ Subwoofer enable ☐ Subwoofer disable

**IR Download**
Download screen for receiving mapping via IR data.
Ecran de chargement pour réception "mapping" via IR data
Laden des Programmschemas per AV-Link
Trasferimento IR
Trasferire schermo per ricezione mappatura via dati IR
Descarga de IR
Pantalla de descarga para recibir el mapeado a través de los datos IR.

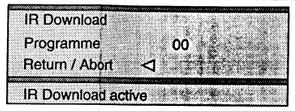


"Programme 00" : function is active or finished.
Return / Abort : To exit/Abort the menu press "left" arrow key or Volume - key of keyboard.
All other IR commands have no response.

"Programme 00" : Fonction active ou finie.
Return / Abort : Pour sortir du menu appuyer sur la touche "gauche" ou "Volume -" du clavier.
Les autres commandes IR sont sans réponse;

"Programme00":Funktion ist aktiv oder beendet
"Return/Abort": Beenden oder Abbruch der Funktion durch Drücken der linken Pfeiltaste oder "Lautstärke-" am Gerät.Alle anderen Tasten haben keine Funktion.

Programma 00: la funzione è attiva o finita.
Return/Abort: per uscire dal menu, premere il tasto "sinistra" del telecomando o il tasto Volume- della tastiera.
Tutti gli altri comandi IR sono senza risposta.

"Programme00" : función activa o terminada.
"Return / Abort" : para salir / abortar, pulsar la tecla "flechaizquierda" o la tecla "volumen -" del teclado.
Todos los demás comandos IR son inoperantes

| | |
|---|---|
| **Reset Equ.** | Reset Equaliser<br>Not available<br>Non disponible |

**Burn-In Protection**
- To decrease the risk of marking the screen when displaying static images, the picture is continually displaced over a period of 2 hours by approximately 5 mm.
- Diminue le risque de marquage de l'écran sur image fixe par un déplacement de celle-ci de 5 mm toutes les 2h.et changement de programme.
- Um ein Einbrennen unbewegter Bilder in die Leuchtschicht zu verhindern, wird das Bild nach jedem Programmwechsel und zeitgesteuert alle 2 Stunden um etwa 5mm verschoben.
- Non visualizzare un'immagine fissa per più di due ore, nel caso, cambiare programma.
- Protege la pantalla contra marcas con imagen fija desplazándola 5 mm cada 2 horas y cambiando el programa

☑ Available ☐ Not available

**Brand***
Set the "Brand": Thomson, Telefunken, Other
Factory adjusted
Reserve au reglage usine
Reserviert für Fabrikeinstellungen
Riservato alla regolazione di fabbrica
Ajuste reservado fábricas
Press </>: remote control; Vol. +/- : TV keyb.

## GEOMETRY

**Return**
Closes the sub-menu and returns to the "Main Service Menu"
Retourne au menu principal.
Schließt das Untermenü, und das Servicemodus-Menü erscheint.
Chiude il sottomenu e fa apparire il menu principale Field Service Mode.
Cierra el submenú. El menú Field Service Mode aparece.
Press </> on the RCU or Vol. +/- on project.front panel

**System Voltage**
Adjustment of the main system voltage is only possible via the local keyboard Vol +/- .
- Adjust **Usys = 134V**
*(Adjustments p. 16.)*

**H-VCO** Horizontal - VCO Oscillator.
Adjust the value of H-VCO until the speed of the unsynchronised picture becomes stable. (i.e minimum roll).
Agir sur H-VCO pour obtenir une image la plus proche de la synchronisation
H_VCO auf Schwebung abgleichen.
Regolare l'H_VCO finché l'immagine non sincronizzata non avrà raggiunto la velocità minima.
Ajuste H_VCO hasta que la imagen no sincronizada alcance su velocidad más baja.
default value = 0FH
Press </>: remote control; Vol. +/- : RP keyb.

| | | |
|---|---|---|
| **H-Delay** | | Horizontal delay<br>Use "+" and "-" to adapt the image |

**V-Blanking**
1-Adjust V-amp. for a 107% over scanned picture.
2-Reduce V-blanking for visible lines top and bottom of screen.
3-Increase step by stepV-blank. until at the bottom and the cut- off lines on the top of the screen disappear.
4-Increase one more step
5-Fine adjust V-amp. and V-position

1-V-amp. amplitude verticale suffisante (>7% overscan)
2-Réduire V-blanking:visible en haut et bas.
3-Agir étape par étape jusqu'à disparition du blanking en bas d'image et des lignes de cut-off en haut d'écran
4-Augmenter d'une valeur.
5-Faire un réglage fin de V-amp. et V-position

1- Voreinstellung der V-amp auf: >7% Überschreibung.
2- Reduzieren Sie V-Blanking soweit bis die ersten geschriebenen Zeilen am oberen Bildrand sichtbar werden.
3- Erhöhen Sie V-Blanking Schritt für Schritt bis die Cut-Off Meßzeilen gerade am oberen Bildrand verschwinden.
4- Erhöhen Sie V-Blanking um eine Stufe.
5- Feineinstellung von V-Amp und V-Position.

1- Ampiezza verticale: grande a sufficiensa (7% di sovrascanzioni)
2- Riduzze il V-blanking per visualizzare le linee : alto e in basso dello schermo.
3- Aumentare passo/passo: finche'le linee di cut off nella parte alta dello schermo scompaiono.
4- Aumentare ancora di un passo
5- Regolare con precisione l'ampiezza e la posizione verticali.

1- Amplitud V: suficientemente grande (7% de sobreexploración)
2- Reducir el borrado V: visible en las partes superior e inferior.
3- Aumentar el paso a paso: el borrado en la parte inferior y las líneas de cut-off en la parte superior desaparecen.
4- Aumentar de otro paso.
5- Ajustar finamente la amplitud V y la posición V.

| | | |
|---|---|---|
| **V-Amplitude** | | *Interlace (p. 20)* |
| **V-Position** | Vertical Power Stage zero adjust.<br>*(Adjustments : refer to RPC19 Service Manual Part : 350 645 90 )* | |

## GEOMETRY

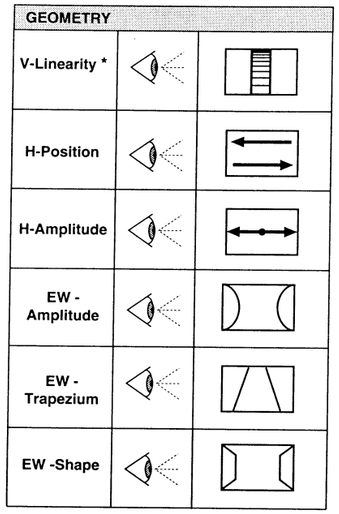


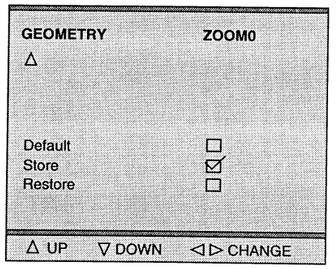


page 3

➞ After setting ➞ Store (+) ☑

**Default Values** :

| | | | |
|---|---|---|---|
| - U Sys. | : 98 | - V-Linearity * | : 60 |
| - H-VCO | : 80 | - H-Position | : 78 |
| - H-Delay | : 80 | - H-Amplitude | : 78 |
| - V-Blanking | : A0 | - EW-Amplitude | : 8C |
| - V-Amplitude | : 4E | - EW-Trapezium | : 78 |
| - V-Position | : 80 | - EW-Shape | : 00 |

* - V-Linearity : 60= Fix value. Not to change.

## VIDEO PAL

**Return**
Closes the sub-menu and returns to the "Main Service Menu"
Retourne au menu principal.
Schließt das Untermenü, und das Servicemodus-Menü erscheint.
Chiude il sottomenu e fa apparire il menu principale Field Service Mode.
Cierra el submenú. El menú Field Service Mode aparece.
Press </> on the RCU or Vol. +/- on project.front panel

**Norm. (Factory)**

Recalls the factory settings for colour, brightness, contrast and sharpness and sets contrast expand to "low".

☑ Factory settings recalled
☐ User settings kept.

**G2 Alignment**

Display a special menu:

Adjust R-Cut off and G-Cut off to 80H temporary.

RGB cutoff counters

Adjust the values with the 3 potentiometer on CRT boards to: R=28 G=28 B=28

To return video submenu:
Press </>/OK: remote control;Vol. +/- :RP keyb.
Select"Restore" to restore the cut off values.

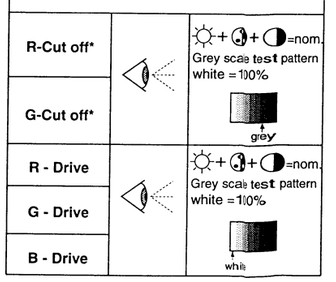


**Note :**
* adjust separate for PAL/NTSC/SECAN and RGB/AV

➞ After setting ➞ Store (+) ☑

**Default Values** :

| | | | |
|---|---|---|---|
| - R-Cut off | : 70 | - B-Drive | : 64 |
| - G-Cut off | : B8 | - Scale bright. | : 90 |
| - R-Drive | : 54 | - Scale colour | : 94 |
| - G-Drive | : 94 | - Scale contrast | : BC |

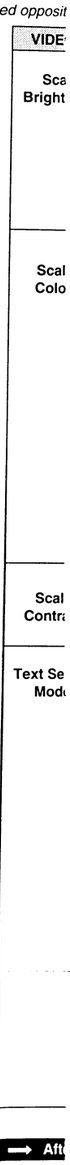


**IMPORTANT**

Factory setting values are indicated on a label inside the optical block housing. These should be used in preference to the default values.

Les valeurs de réglages usines sont indiquées sur une étiquette située à l'intérieur du caisson bloc-optique.Elles sont à utiliser de préférences aux valeurs par défaut

Die Fabrik-Einstellwerte sind auf einem Aufkleber im Inneren des Gehäuses des Optischen Blocks angebracht.
Diese sollten den Defaultwerten vorgezogen werden.

I valori di regolazione di fabbrica vengo all'interno del contenitore del blocco ott Questi valori devono essere utilizzati di

Los valores de los ajustes de fábrica se interior de la cubierta del bloque óptico. valores por defecto

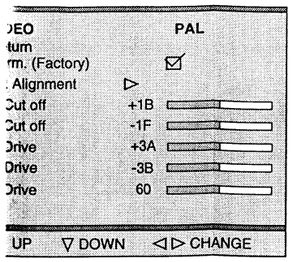


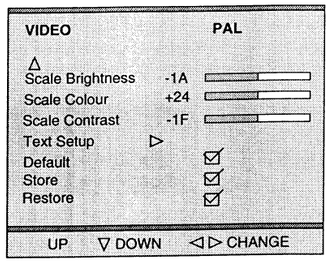


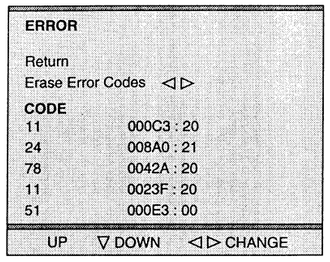


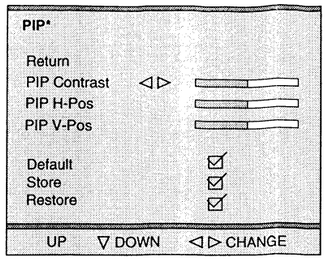


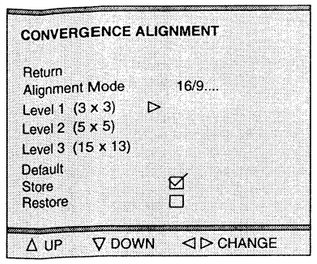


*standard or RGB is autodetected and displayed opposite the displayed opposite the menu title.*

• *only PIP models*

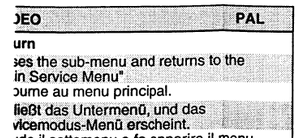


**rm. (Factory)**

alls the factory settings for colour,
ntness, contrast and sharpness and sets
rast expand to "low".

Factory settings recalled
User settings kept.

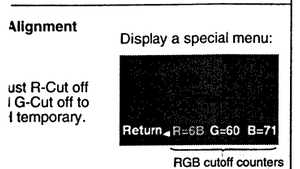


ust the values with the 3 potentiometer
CRT boards to: R=28 G=28 B=28

eturn video submenu:
s </>/OK: remote control;Vol. +/- :RP keyb.
ct"Restore" to restore the cut off values.

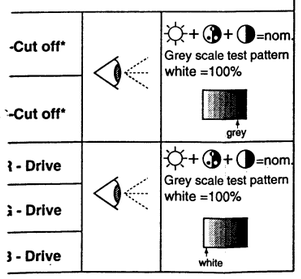


te :
ust separate for PAL/NTSC/SECAM and RGB/AV

After setting → Store (+)

ault Values :

| | |
|---|---|
| -Cut off : 70 | - B-Drive : 64 |
| -Cut off : B8 | - Scale bright. : 90 |
| -Drive : 54 | - Scale colour : 94 |
| -Drive : 94 | - Scale contrast : BC |

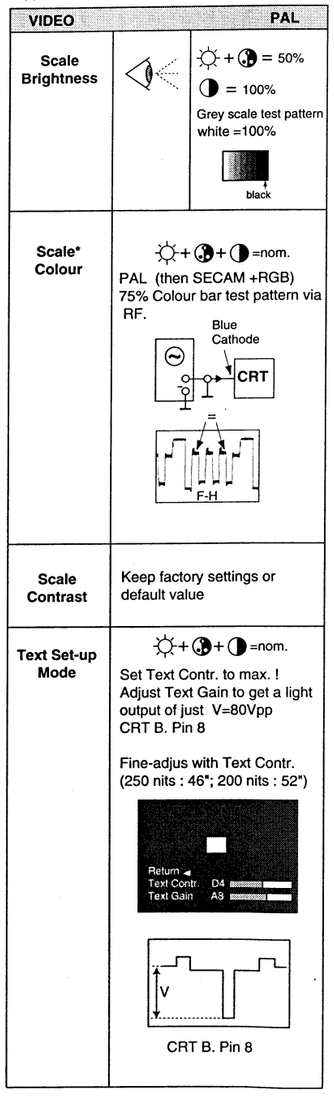


After setting → Store (+)

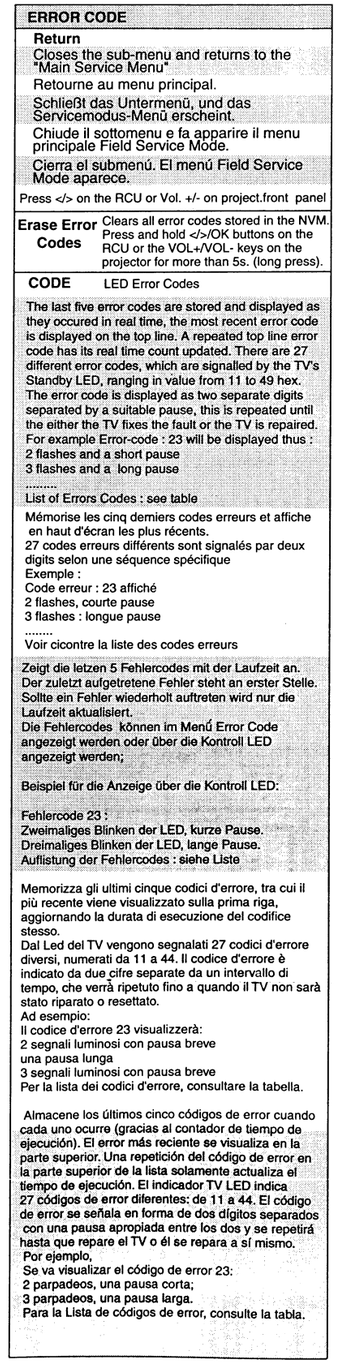


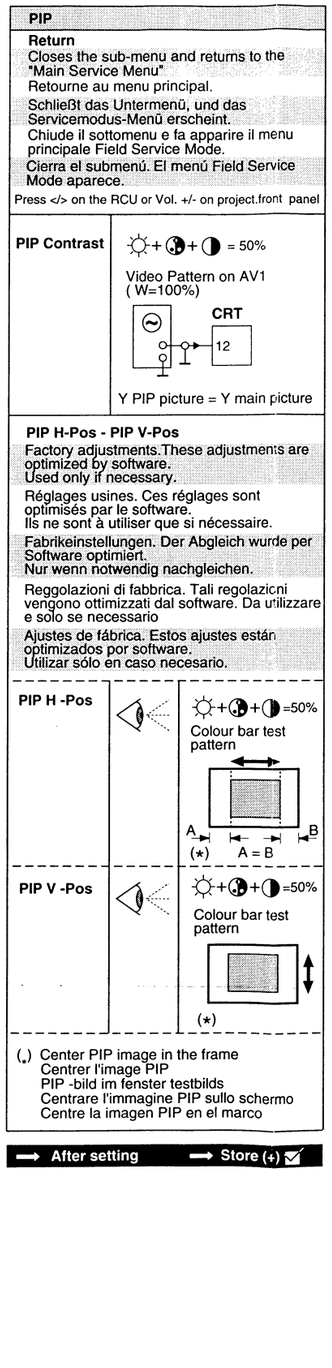


After setting → Store (+)

| | |
|---|---|
| cal block housing. | I valori di regolazione di fabbrica vengono indicati su una etichetta collocata all'interno del contenitore del blocco ottico. Questi valori devono essere utilizzati di preferenza ai valori di default. |
| ette située à l'intérieur<br>ux valeurs par défaut<br>des Gehäuses des | Los valores de los ajustes de fábrica se indican en una etiqueta situada en el interior de la cubierta del bloque óptico. Son de utilización preferente a los valores por defecto |



## GEOMETRY MODE ALIGNMENT

### 4/3 picture tube

Signal : 4/3 test pattern

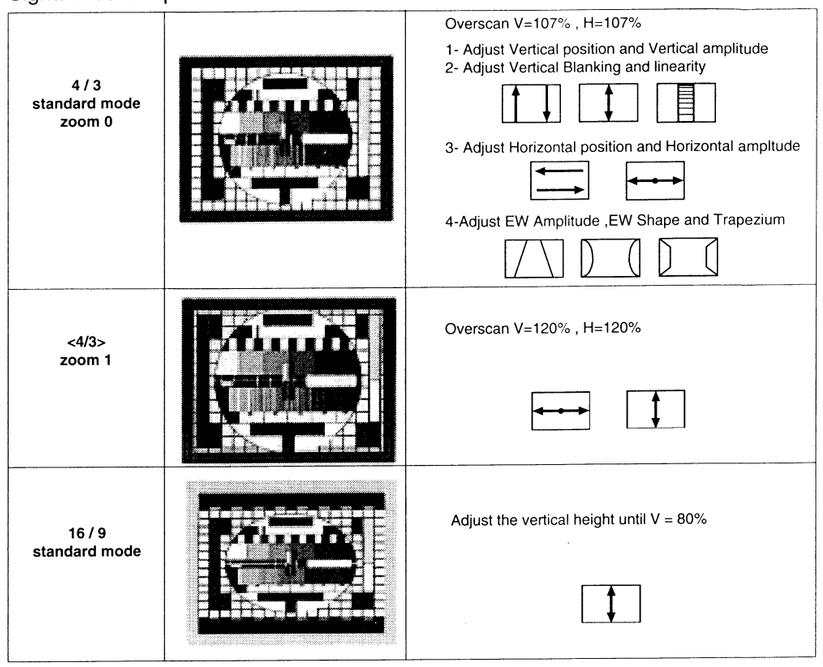


### 16/9 picture tube

Signal : 4/3 test pattern

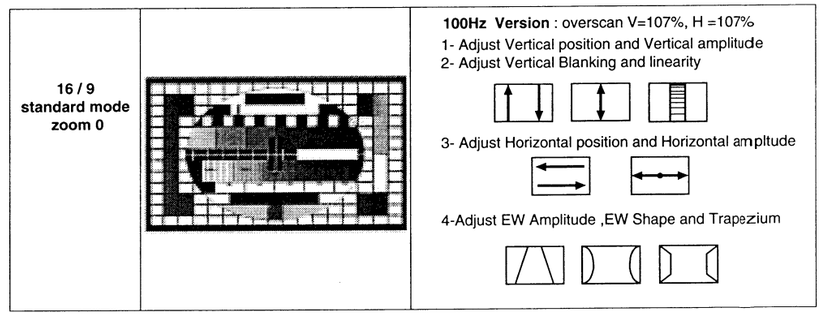


### Note : GEOMETRY : V-Amplitude

### Vertical Interlace - Entrelacement Vertical - Vertikal Interlace
### Interlaccio Verticale - Entrelazado vertical

- Check the vertical Interlace*.
- Contrôler l'entrelacement vertical*.
- Überprüfen Sie das vertikale Interlacing ("Verschachtelung") der Zeilen*.
- Controllare l'interlaccio verticale*.
- Compruebe El entralazado vertical*.

*Good : Interlaced* *Wrong : Paired*

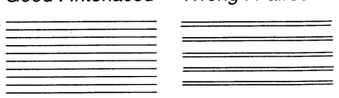

If the interlace is poor, adjust the **VAMP.** by 1/2 steps (+ or - ) to achieve the best interlace.

Si l'entrelacement n'est pas correct agir sur **V AMP** de une ou deux valeurs pour obtenir un entrelacement correct.

Bei einer Paarigkeit der Zeilen verstellen Sie **V AMP** um 1 oder 2 Stufen (+ oder -)

Si el entrelazado no es bueno, mueva **VAMP** en 1 o 2 pasos (+ o -) para conseguir la mejor.

Se l'interlaccio non e' idoneo, correggere **VAMP** di 1 o 2 fasi (+/-) per ottenere l'interlaccio migliore.

* To check in 4:3 and in 16:9 - Contrôler en 4:3 et 16:9 - Kontrollieren Sie im 4:3 und im 16:9 Format .- Controllare nel formato 4:3 e 16:9. - Revisar en 4:3 y 16:9

## ERROR CODES

### GB

11 1st Audio_MSP doesn't answer
12 2nd Audio-MSP doesn't answer
13 Audio-DSP doesn't answer
14 Video IC STV2161/2 doesn't answer
15 Chroma IC 2151/9143 doesn't answer
16 Upconverter DMU0 doesn't answer
17 Audio ( or Dolby) module not detected
18 SCART IC TEA6415C doesn't answer
19 Tuner CTT5000 doesn't answer
21 I2C Bus1 data line held low
22 I2C Bus2 data line held low
23 I2C Bus1 clock line held low
24 I2C Bus2 clock line held low
25 Switched 5V not available
26 Tube doesn't get warm in time
27 Deflection detects >3 times protection (problem detected on "breathing" line)
29 DRAM memory of Megatext defect
31 RAM is full
32 A software-timer has been requested, but is not available yet
33 The PSI chip (STV2165) doesn't answer
34 The NVM (X24C32) chip doesnt answer
35 13V not available
36 Wrong addr. NVRAM passed to the bus-handler
37 Unexpected level on NMI (Interrupt) line found (possible cause : tube flashover)
38 M3LBus for Megatext is blocked
39 Megatext (SDA5273) doesn't answer
41 Bus1 Data Line not recoverable
42 bus2 Data Line not recoverable
43 MCU (Motion Mastering Up-Converter) doesn't answer
44 Convergence IC (STV2040) doesn't answer
45 Defect "Video Module" is detected
46 "Default" NVRAM of DCU doesn't answer
47 Test Pattern chip of DCU defect
48 Test Pattern NVRAM convergence chip defect
49 Convergence module doesn't answer anymore
51 PIP Module doesn't answer.
52 The Teletext module is not conform .

### F

11 Processeur Audio MSP ne répond plus
12 Deuxième MSP ne répond plus (Dolby)
13 Audio-DSP ne répond plus (produit Dolby)
14 Video-IC STV2161 ou 2162 ne répond plus
15 Chroma-IC STV2151 ou TDA9143 ne répond plus
16 Convertisseur de frequence d'image digital DMU0 (Intelligent Mastering) ne répond plus
17 Module son (ou Dolby) n'est pas détecté
18 Commutateur SCART TEA6415C ne répond plus
19 Tuner CTT5000 ne répond plus
21 I2C-bus 1 data bloqué au niveau bas
22 I2C-bus 2 data bloqué au niveau bas
23 I2C-bus 1 clock bloqué au niveau bas
24 I2C-bus 2 clock bloqué au niveau bas
25 Le "5V commuté" n'est pas disponible
26 Tube ne chauffe pas a temps
27 Protection base de temps active plus de trois fois ( problème détecté sur la ligne "breathing")
29 Mémoire (DRAM) du Megatext est en panne
31 Plus de place en RAM
32 Requète logiciel-timer demandée mais pas encore disponible
33 STV 2165 (PSI 100Hz) ne répond plus
34 NVM (mémoire) X24C32 ne répond plus
35 +13V n'est pas disponible
36 Adresse NVRAM inconnue
37 Problème détecté sur la ligne "Interrupt" pendant le démarrage ou le fonctionnement duTV. Possibilité: "arking"?
38 Bus M3L pour Megatext est bloqué
39 Megatext (SDA5273) ne répond plus
41 I2C-bus 1 data reste blocqué
42 I2C-bus 2 data reste blocqué
43 MCU (convertisseur de frequence d'image digital: Motion Mastering) ne répond plus
44 Le CI Convergence (STV2040) ne répond plus
45 "Vidéo Module" erroné détecté
46 La NVRAM "Default" de la platine de convergence ne répond plus
47 Test Pattern du CI de Convergence erroné
48 Test Pattern des NVRAM de Convergence erroné
49 La platine de Convergence ne répond plus.
51 Le module PIP ne répond plus.
52 Le Module Text (DVT) n'est pas le bon.

### D

11 Audio MSP Prozessor antwortet nicht.
12 Zweiter Audio MSP Prozessor antwortet nicht.(Dolby)
13 Audio DSP Prozessor antwortet nicht. (Dolby)
14 IC STV2161/62 antwortet nicht
15 IC STV2151 / TDA9143 antwortet nicht
16 DMU0 Upconverter (Videomodul) antwortet nicht
17 Audio- oder Dolby-Modul nicht erkannt
18 TEA6415C antwortet nicht (SCART-Schalter)
19 Tuner CTT5000 antwortet nicht
21 I2C Bus1 data line ist auf low
22 I2C Bus2 data line ist auf low
23 I2C Bus1 clock line ist auf low
24 I2C Bus2 clock line ist auf low
25 Geschaltete 5V nicht vorhanden
26 Röhre wird nicht rechtzeitig warm
27 Ablenkung meldet 3 mal Fehler. (Problem auf Breathing Leitung)
29 DRAM des Megatext defekt
31 RAM antwortet nicht
32 Ein software-timer wurde angefordert, ist aber noch nicht bereit
33 STV 2165 (PSI 100Hz) antwortet nicht
34 NVM Chip antwortet nicht (X24C32)
35 +13V nicht vorhanden
36 NVM adresse nicht gefunden
37 Unerwarteter Zustand an NMI (Interrupt) line gefunden. (Mögliche Ursache = Röhren-Überschlag")
38 M3L Bus des Megatext blockiert
39 Megatext (SDA 5273) antwortet nicht
41 Bus1 (data line) nicht möglich zu reaktivieren
42 Bus2 (data line) nicht möglich zu reaktivieren
43 MCU (Motion Mastering Up-Converter) antwortet nicht
44 Konvergenz IC (STV2040) antwortet
45 falsches Videomodul (falscher MCU)
46 NVRAM für Konvergenz antwortet nicht
47 Bildmuster im Konvergenz-IC ist defekt
48 Bildmuster aus dem NVRAM ist defekt
49 Bildrohrtyp "R" ist eigestellt, aber kein Konvergenz-IC gefunden
51 PIP antwortet nicht
52 Falsches Videotextmodul.

### I

11 Il primo IC Audio MSP non risponde
12 Il secondo IC Audio MSP non risponde
13 L'integrato Audio DSP non risponde
14 L' IC 2161/2 non risponde
15 L'IC 2151/9143 non risponde
16 Il convertitore non risponde
17 Il Modulo Audio non viene identificato
18 Il TEA6415C non risponde
19 Il sintonizzatore non risponde
21 Linea data I2C bus 1 forzata bassa
22 Linea data I2C bus 2 forzata bassa
23 Linea clock I2C bus 1 forzata bassa
24 Linea clock I2C bus 2 forzata bassa
25 La tensione 5V commutati non disponibile
26 Il tubo non raggiunge la corretta temperatura nel tempo stabilito
27 Per 3 volte, la deflessione ha rilevato una protezione (problema riscontrato dalle linee "breathing")
29 Difetto alla DRAM di Megatext
31 La RAM è satura
32 E' stato richiesto un software-timer, ma non é ancora disponible
33 Il chip PSI non risponde
34 Il chip NVM non risponde
35 13V non disponibile
36 E' stato trasmesso al bus un indirizzo errato della NVRAM
37 Livello imprevisto sulla linea NMI
38 Bus M3L per Megatext bloccato
39 Megatext non risponde
41 Bus 1 (linea dati) non ripristinabile
42 Bus 2 (linea dati) non ripristinabile
43 MCU non risponde
44 Convergenza IC (STV2040) non risponde
45 rivelato Modulo Video difettoso
46 "Default" NVRAM di DCU non risponde
47 Integrato generatore di test DCU difettoso
48 Integrato generatore di test NVRAM difettoso
49 Il modulo convergenza non risponde
51 Il Modulo PIP non viene identificato
52 Il modulo Televideo non è conforme

### E

11 Procesador de audio MSP no responde
12 Segundo MSP no responde (Dolby)
13 Audio DSP no responde
14 Cir. integrado de video STV2161 ó 2162 no responde
15 Cir. integrado croma ST2151 ó TDA9143 no responde
16 Convertidor de frecuencia de imagen digital DMU0 (Mastering Inteligente) no responde
17 Módulo de sonido (o Dolby) no se detecta
18 Conmutador Scart (TEA6415C) no responde
19 Tuner CTT5000 no responde
21 Data 1 del bus I2C permanece en bajo
22 Data 2 del bus I2C permanece en bajo
23 Clock 1 del bus I2C permanece en bajo
24 Clock 2 del bus I2C permanece en bajo
25 No se dispone de los "5v conmutados"
26 El tubo tarda en calentarse
27 La protección de la deflexión actúa mas de 3 veces (el problema se detecta en la línea de "breathing")
29 La memoria DRAM del Megatext está defectuosa
31 RAM está llena
32 Un timer-software ha sido solicitado, pero no está disponible
33 El chip STV2161 (PSI 100Hz) no responde
34 La memoria no volátil X24C32 no responde
35 No están disponibles los + 13 v.
36 Dirección de la NVRAM incorrecta
37 Problema detectado en la línea "Interrupt" durante el arranque o el funcionamiento del TV.Posibilidad de chispazos en muy alta?
38 El bus M3L para el Megatext está bloqueado
39 Megatext (SDA5273) no responde
41 Data 1 del bus I2C permanece boqueado
42 Data 2 del bus I2C permanece bloqueado
43 MCU (convertidor de frecuencia de imagen digital: Motion Mastering) no responde
44 Cir. integrado de covergencia (STV2040) no responde
45 Fallo detectado en el módulo de Video
46 Fallo en NVRAM o DCU no responde
47 Fallo en c.i. de mira o DCU
48 Fallo en c.i. NVRAM de convergencias
49 El módulo de convergencias no responde
51 El módulo PIP no responde
52 El módulo Teletexto no es conforme



## MAIN BOARD - PLATINE PRINCIPALE - CHASSIS GRUNDPLATTE - PIASTRA PRINCIPALE - PLATINA PR

COMPONENT SIDE - COTE COMPOSANTS - BESTÜCKUNGSSEITE - LATO COMPONENTI - LADO COMPONENTES

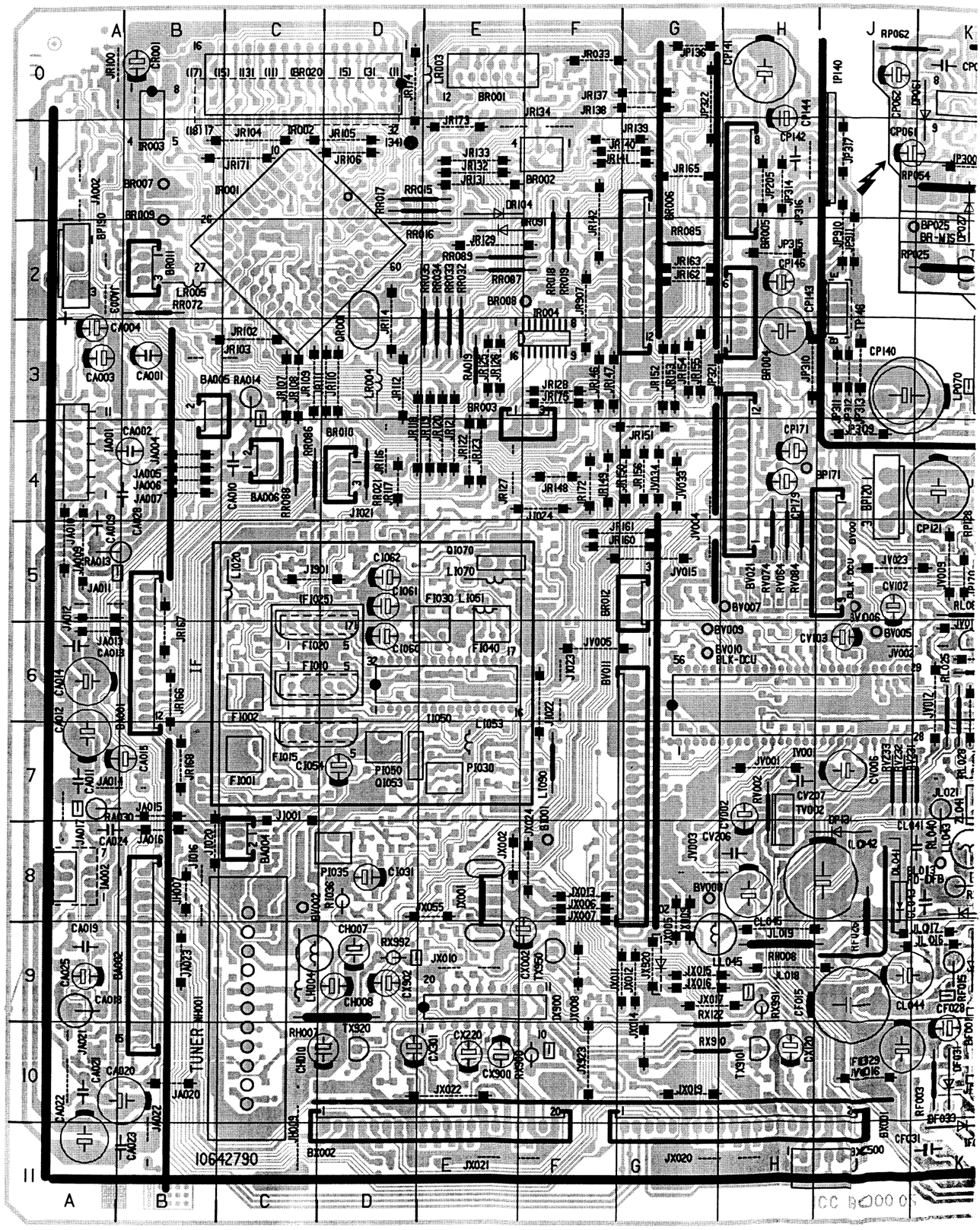

# A PRINCIPALE - PLATINA PRINCIPAL

- LADO COMPONENTES

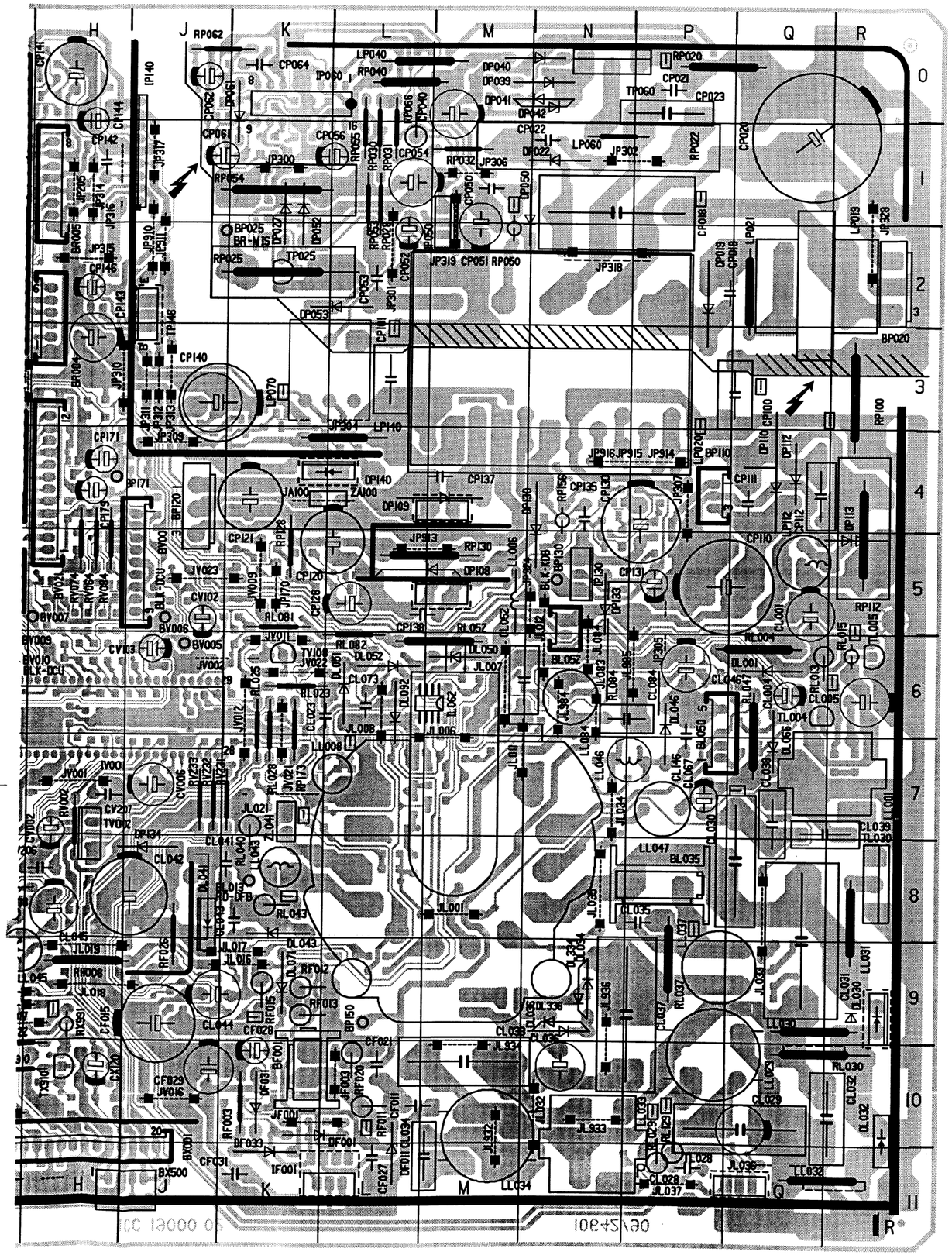



# COMPONENTS LOCATION - LOCALISATION DES ELEMENTS - LAGE DER BAUTEILE - LOCALIZZAZIONE DEGLI ELEMENTI - LOCALIZACION DE LOS COMPONENTES

* SOLDER SIDE - COTE CUIVRE - LÖTSEITE - LATO SALDATURE - LADO DEL COBRE

| 1 | 2 | 3 |
|---|---|---|

| | | |
|---|---|---|
| BA001 | | B6 |
| BA005 | | B3 |
| BF001 | | K10 |
| BI001 | | F8 |
| BL013 | | K8 |
| BL035 | | P8 |
| BL052 | | N5 |
| BP025 | | J2 |
| BP110 | | P4 |
| BP130 | | N5 |
| BP150 | | L9 |
| BP171 | * | H4 |
| BP190 | | A2 |
| BR001 | | E0 |
| BR002 | | F1 |
| BR003 | | F4 |
| BR004 | | H2 |
| BR005 | | H1 |
| BR006 | | G2 |
| BR007 | | B1 |
| BR008 | | F2 |
| BR009 | | B2 |
| BR010 | | D4 |
| BR011 | | B2 |
| BR012 | | G5 |
| BV001 | | J5 |
| BV002 | | C8 |
| BV005 | | J6 |
| BV006 | | J5 |
| BV007 | * | H5 |
| BV008 | | G8 |
| BV009 | | G6 |
| BV010 | | G6 |
| BV011 | | G7 |
| BV021 | | H4 |
| BX001 | | H11 |
| BX002 | | E11 |
| BX500 | | J11 |

| | | |
|---|---|---|
| CA001 | | B3 |
| CA002 | | B4 |
| CA003 | | A3 |
| CA004 | | A3 |
| CA005 | * | B3 |
| CA006 | * | B3 |
| CA007 | * | C3 |
| CA008 | * | C4 |
| CA009 | | A5 |
| CA010 | | C4 |
| CA011 | | A7 |
| CA012 | | A7 |
| CA013 | | A6 |
| CA014 | | A6 |
| CA015 | | B7 |
| CA016 | * | B7 |
| CA018 | | A9 |
| CA019 | | A9 |
| CA020 | | B10 |
| CA021 | | A10 |
| CA022 | | A11 |
| CA023 | | B11 |
| CA024 | | A8 |
| CA025 | | A9 |
| CA027 | * | C8 |
| CA028 | | B4 |
| CF002 | * | K10 |
| CF011 | | L10 |
| CF015 | | J9 |
| CF021 | | L10 |
| CF027 | | L11 |
| CF028 | | K10 |
| CF029 | | J10 |
| CF031 | | K11 |
| CH001 | * | C10 |
| CH002 | * | C10 |
| CH003 | * | C10 |
| CH004 | * | C9 |
| CH005 | * | C9 |
| CH006 | * | C9 |
| CH007 | | D9 |
| CH008 | | D9 |
| CH009 | * | B9 |
| CH010 | | D10 |
| CI001 | * | C8 |
| CI002 | * | B7 |
| CI003 | * | C7 |
| CI004 | * | C7 |
| CI005 | * | C7 |
| CI006 | * | C8 |
| CI007 | * | B6 |
| CI008 | * | C5 |
| CI009 | * | C6 |
| CI010 | * | C7 |
| CI011 | * | C7 |
| CI012 | * | C6 |
| CI020 | * | C5 |
| CI021 | * | C6 |
| CI022 | * | F6 |
| CI025 | * | D7 |
| CI030 | * | D8 |
| CI031 | * | D8 |
| CI032 | * | E5 |
| CI033 | * | F4 |
| CI040 | * | C6 |
| CI041 | * | C6 |
| CI045 | * | D5 |
| CI046 | * | E6 |
| CI048 | * | D6 |
| CI049 | * | D6 |
| CI050 | * | D6 |
| CI051 | * | D6 |
| CI052 | * | D6 |
| CI053 | * | E6 |
| CI054 | | D7 |
| CI055 | * | D7 |
| CI056 | * | D7 |
| CI060 | | D6 |
| CI061 | | D5 |
| CI062 | | D5 |
| CI063 | * | D6 |
| CI064 | * | E5 |
| CI065 | * | E5 |
| CI066 | * | E5 |
| CI070 | * | F6 |
| CI071 | * | C5 |
| CI072 | * | B6 |
| CI073 | * | E5 |
| CI074 | * | F5 |
| CI077 | * | E6 |
| CI078 | * | E4 |
| CI090 | * | F7 |
| CL001 | | Q5 |
| CL002 | * | K5 |
| CL003 | * | Q6 |
| CL004 | | Q6 |
| CL005 | | R6 |
| CL006 | * | Q5 |
| CL008 | * | R5 |
| CL023 | | L6 |
| CL027 | * | J6 |
| CL028 | | P11 |
| CL029 | | Q10 |
| CL029 | | Q10 |
| CL030 | | Q8 |
| CL031 | | Q8 |
| CL032 | | R10 |
| CL033 | | M10 |
| CL034 | | M11 |
| CL035 | | P8 |
| CL036 | | N10 |
| CL037 | | P9 |
| CL038 | | Q7 |
| CL039 | | R7 |
| CL041 | | K8 |
| CL042 | | J8 |
| CL043 | | K8 |
| CL044 | | J9 |
| CL045 | | H8 |
| CL046 | | P6 |
| CL052 | | M6 |
| CL057 | * | L7 |
| CL061 | * | M6 |
| CL062 | * | L7 |
| CL063 | * | M7 |
| CL066 | * | Q6 |
| CL067 | | P7 |
| CL073 | | L6 |
| CL084 | | P6 |
| CL146 | | P6 |
| CL211 | * | L8 |
| CP018 | | N1 |
| CP019 | | P2 |
| CP020 | | Q1 |
| CP021 | | P0 |
| CP022 | | N1 |
| CP023 | | P0 |
| CP040 | | M0 |
| CP041 | * | N0 |
| CP042 | * | N0 |
| CP050 | | M1 |
| CP051 | | M2 |
| CP052 | | L2 |
| CP053 | | L2 |
| CP054 | | L1 |
| CP055 | * | L1 |
| CP056 | | L1 |
| CP060 | * | K1 |
| CP061 | | J1 |
| CP062 | | J0 |
| CP063 | * | J0 |
| CP064 | | K0 |
| CP065 | * | L0 |
| CP067 | * | L0 |
| CP068 | * | K0 |
| CP071 | * | K0 |
| CP100 | | P3 |
| CP100 | | Q3 |
| CP101 | | L3 |
| CP102 | * | M3 |
| CP110 | | P5 |
| CP111 | | Q4 |
| CP112 | | Q4 |
| CP120 | | L5 |
| CP121 | | K4 |
| CP126 | | L5 |
| CP130 | | P4 |
| CP131 | | P5 |
| CP135 | | N4 |
| CP136 | * | J3 |
| CP137 | | M4 |
| CP138 | | L5 |
| CP140 | | J3 |
| CP141 | | H0 |
| CP142 | | H1 |
| CP143 | | H3 |
| CP144 | | H1 |
| CP146 | | H2 |
| CP150 | * | H2 |
| CP151 | * | N4 |
| CP152 | * | N4 |
| CP168 | * | G1 |
| CP170 | * | K6 |
| CP171 | | H4 |
| CP176 | * | H4 |
| CP179 | | H4 |
| CR001 | | B0 |
| CR002 | * | A0 |
| CR003 | * | C2 |
| CR004 | * | C2 |
| CR005 | * | B0 |
| CR006 | * | B0 |
| CR007 | * | D0 |
| CR008 | * | D1 |
| CR009 | * | D2 |
| CR010 | * | D2 |
| CR011 | * | D2 |
| CR015 | * | D1 |
| CR016 | * | E1 |
| CR017 | * | E1 |
| CR018 | * | F2 |
| CR019 | * | F2 |
| CR020 | * | E4 |
| CR021 | * | D4 |
| CR022 | * | D3 |
| CR023 | * | E4 |
| CR029 | * | F0 |
| CR030 | * | F0 |
| CR032 | * | F0 |
| CR033 | * | E0 |
| CR034 | * | E0 |
| CR035 | * | E0 |
| CR036 | * | C3 |
| CR037 | * | C3 |
| CR038 | * | E3 |
| CR039 | * | B2 |
| CR041 | * | E2 |
| CR042 | * | F1 |
| CR043 | * | F0 |
| CR049 | * | F2 |
| CR050 | * | F2 |
| CR060 | * | B2 |
| CR062 | * | D4 |
| CR063 | * | C4 |
| CR065 | * | G2 |
| CR066 | * | G2 |
| CR067 | * | B2 |
| CR072 | * | B3 |
| CR075 | * | B1 |
| CR085 | * | F2 |
| CR086 | * | C4 |
| CR087 | * | D2 |
| CR090 | * | F2 |
| CR091 | * | E2 |
| CR092 | * | C2 |
| CR093 | * | G0 |
| CR098 | * | F0 |
| CR100 | * | B1 |
| CR101 | * | E0 |
| CR104 | * | E1 |
| CR110 | * | F4 |
| CV002 | | H7 |
| CV003 | * | J6 |
| CV006 | | J7 |
| CV007 | * | J6 |
| CV008 | * | H6 |
| CV009 | * | H7 |
| CV011 | * | J6 |
| CV012 | * | J6 |
| CV021 | * | G6 |
| CV022 | * | G7 |
| CV023 | * | G7 |
| CV025 | * | G7 |
| CV031 | * | G5 |
| CV032 | * | G5 |
| CV033 | * | G4 |
| CV036 | * | G6 |
| CV039 | * | G6 |
| CV041 | * | G7 |
| CV042 | * | G6 |
| CV044 | * | G8 |
| CV046 | * | H6 |
| CV047 | * | H6 |
| CV048 | * | H7 |
| CV062 | * | H5 |
| CV063 | * | H5 |
| CV072 | * | H5 |
| CV073 | * | H5 |
| CV082 | * | H5 |
| CV083 | * | H5 |
| CV092 | * | H6 |
| CV102 | | J5 |
| CV103 | | J6 |
| CV206 | | H8 |
| CV207 | | H7 |
| CV213 | * | J6 |
| CV216 | * | J6 |
| CV222 | * | K6 |
| CV231 | * | J6 |
| CV232 | * | J6 |
| CV234 | * | K6 |
| CV241 | * | J6 |
| CV242 | * | K6 |
| CV243 | * | K5 |
| CV246 | * | H6 |
| CX001 | * | E9 |
| CX002 | | F9 |
| CX120 | | H10 |
| CX130 | * | J10 |
| CX140 | * | J10 |
| CX150 | * | G10 |
| CX220 | | E10 |
| CX250 | * | E10 |
| CX280 | * | B8 |
| CX282 | * | D10 |
| CX301 | | D10 |
| CX350 | * | E10 |
| CX722 | * | D11 |
| CX723 | * | D11 |
| CX724 | * | C11 |
| CX726 | * | D11 |
| CX900 | | E10 |
| CX901 | * | F9 |
| CX902 | | D9 |
| CX910 | * | H10 |
| CX920 | * | D10 |
| CX950 | * | F9 |
| CX965 | * | E9 |

| | | |
|---|---|---|
| DA001 | * | A1 |
| DA002 | * | A11 |
| DF001 | | K10 |
| DF002 | * | K10 |
| DF007 | * | K10 |
| DF011 | | L11 |
| DF028 | * | K10 |
| DF031 | | K10 |
| DF033 | | K11 |
| DH001 | * | C9 |
| DI001 | * | C5 |
| DI002 | * | C7 |
| DI040 | * | C6 |
| DI041 | * | C6 |
| DI051 | * | E5 |
| DI070 | * | E5 |
| DI071 | * | F5 |
| DL001 | | Q6 |
| DL003 | * | R7 |
| DL004 | * | R7 |
| DL023 | * | L6 |
| DL030 | | R9 |
| DL030 | | R9 |
| DL032 | | R11 |
| DL034 | | N9 |
| DL036 | | N9 |
| DL041 | | J8 |
| DL041 | | J8 |
| DL041 | | J8 |
| DL043 | | K8 |
| DL046 | | P6 |
| DL050 | | M6 |
| DL051 | | L6 |
| DL052 | | L6 |
| DL057 | * | L7 |
| DL060 | * | M6 |
| DL066 | | Q7 |
| DL070 | * | M7 |
| DL071 | | K9 |
| DL072 | * | K9 |
| DL092 | | L6 |
| DL157 | * | L8 |
| DP019 | | P2 |
| DP022 | | N1 |
| DP027 | | K1 |
| DP039 | | N0 |
| DP040 | | N0 |
| DP041 | | N0 |
| DP050 | | M1 |
| DP051 | * | M2 |
| DP052 | | K1 |
| DP053 | | L2 |
| DP060 | * | K1 |
| DP061 | | K0 |
| DP070 | * | K0 |
| DP108 | | L5 |
| DP108 | | M4 |
| DP108 | | M5 |
| DP109 | | M4 |
| DP109 | | M4 |
| DP109 | | M4 |
| DP110 | | Q4 |
| DP112 | | Q4 |
| DP113 | | R5 |
| DP126 | * | K5 |
| DP130 | | N4 |
| DP131 | * | N5 |
| DP132 | * | P5 |
| DP133 | | N5 |
| DP134 | | J8 |
| DP140 | | L4 |
| DP140 | | L4 |
| DP151 | * | N4 |
| DP152 | * | N5 |
| DP160 | * | L4 |
| DP172 | * | H4 |
| DP173 | * | H4 |
| DP175 | * | H3 |
| DP178 | * | H3 |
| DP179 | * | J4 |
| DP190 | * | A1 |
| DR090 | * | G0 |
| DR091 | | E2 |
| DR104 | | E1 |
| DV011 | * | G8 |
| DV012 | * | G8 |
| DV025 | * | G7 |
| DV026 | * | G8 |
| DV027 | * | G8 |
| DV028 | * | G8 |
| DV038 | * | G6 |
| DV039 | * | G6 |
| DV101 | * | J5 |
| DV104 | * | K5 |
| DV108 | * | K6 |
| DV221 | * | K7 |
| DX001 | * | E8 |
| DX120 | * | G10 |
| DX151 | * | F10 |
| DX220 | * | E9 |
| DX251 | * | E9 |
| DX301 | * | D10 |
| DX351 | * | E10 |

| | | |
|---|---|---|
| FI001 | | C7 |
| FI002 | | C6 |
| FI010 | | C6 |
| FI015 | | C7 |
| FI020 | | C6 |
| FI030 | | E6 |
| FI040 | | E6 |

| | | |
|---|---|---|
| IA001 | | A4 |
| IA001 | | A7 |
| IA001 | | A8 |
| IA002 | | A2 |
| IF001 | | L11 |
| II050 | | E6 |
| IL062 | | M6 |
| IP050 | | M1 |
| IP060 | | K0 |
| IP130 | | N5 |
| IP140 | | J1 |
| IP140 | | J2 |
| IR001 | | C2 |
| IR002 | | C0 |
| IR003 | | B0 |
| IR004 | | F3 |
| IV001 | | H6 |
| IX001 | | E8 |
| IX001 | | E8 |
| IX900 | | E9 |

| | | |
|---|---|---|
| JA002 | | A1 |
| JA003 | | A2 |
| JA004 | | B4 |
| JA005 | | B4 |
| JA006 | | B4 |
| JA007 | | B4 |
| JA008 | * | A5 |
| JA009 | | A5 |
| JA010 | | A5 |
| JA011 | | A5 |
| JA012 | | A5 |
| JA013 | | A6 |
| JA014 | | B7 |
| JA015 | | B7 |
| JA016 | | B8 |
| JA017 | | A7 |
| JA018 | * | A8 |
| JA019 | * | B7 |
| JA020 | | B10 |
| JA021 | | A10 |
| JA022 | | B11 |
| JA023 | | B9 |
| JA051 | * | A10 |
| JA052 | * | B10 |
| JA053 | * | B9 |
| JA054 | * | B9 |
| JA055 | * | A4 |
| JA056 | * | A4 |
| JA100 | | K4 |
| JA901 | * | B8 |
| JA902 | | A6 |
| JF001 | | K10 |
| JF003 | | L10 |
| JF004 | * | J9 |
| JF005 | * | L11 |
| JF010 | * | K10 |
| JF011 | * | K10 |
| JH005 | * | C8 |
| JH006 | * | C8 |
| JH007 | | B8 |
| JH009 | | C11 |
| JH903 | * | C10 |
| JI001 | | C7 |
| JI004 | * | D9 |
| JI005 | * | E7 |
| JI006 | * | E7 |
| JI008 | * | C6 |
| JI009 | * | E6 |
| JI010 | * | D5 |
| JI012 | * | C5 |
| JI013 | * | D5 |
| JI014 | * | F5 |
| JI015 | * | D7 |
| JI016 | | B8 |
| JI020 | | B8 |
| JI021 | | D5 |
| JI022 | | F6 |
| JI023 | | F6 |
| JI024 | | F4 |
| JI901 | | C5 |
| JI902 | * | D5 |
| JI903 | * | D6 |
| JI906 | * | D8 |
| JI910 | * | D5 |
| JI915 | * | E7 |
| JI916 | * | E7 |
| JI928 | * | D8 |
| JI930 | * | D7 |
| JI931 | * | D8 |
| JL001 | | M8 |
| JL005 | * | Q5 |
| JL006 | | M7 |
| JL007 | | M6 |
| JL008 | | L6 |
| JL009 | * | M7 |
| JL010 | * | M8 |
| JL011 | | M7 |
| JL012 | | N6 |
| JL016 | | K9 |
| JL017 | | K9 |
| JL018 | | H9 |
| JL019 | | H9 |
| JL020 | * | K7 |
| JL021 | | K7 |
| JL032 | | N10 |
| JL033 | | Q8 |
| JL034 | | N7 |
| JL035 | | N8 |
| JL036 | | Q11 |
| JL037 | | P11 |
| JL064 | * | P6 |
| JL083 | | N6 |
| JL084 | | N6 |
| JL932 | | M10 |
| JL933 | | N10 |
| JL934 | | M10 |
| JL936 | | N10 |
| JL984 | | N6 |
| JL985 | | P6 |
| JP136 | | G0 |
| JP170 | | K5 |
| JP204 | * | P5 |
| JP205 | | H1 |
| JP208 | * | J5 |
| JP209 | * | P0 |
| JP300 | | K1 |
| JP301 | | L2 |
| JP302 | | P1 |
| JP304 | | L3 |
| JP305 | | P5 |
| JP306 | | M1 |
| JP307 | | P4 |
| JP309 | | J4 |
| JP310 | | H3 |
| JP311 | | J3 |
| JP312 | | J3 |
| JP313 | | J3 |
| JP314 | | H1 |
| JP315 | | H2 |
| JP316 | | H1 |
| JP317 | | J1 |
| JP318 | | N2 |
| JP319 | | M1 |
| JP321 | | H3 |
| JP322 | | G0 |
| JP324 | | N5 |
| JP328 | | R2 |
| JP902 | * | K2 |
| JP910 | | J2 |
| JP911 | | J2 |
| JP913 | | L5 |
| JP914 | | P4 |
| JP915 | | P4 |
| JP916 | | P4 |
| JP917 | * | P4 |
| JR007 | * | C0 |
| JR008 | * | B1 |
| JR009 | * | B3 |
| JR010 | * | B0 |
| JR011 | * | B4 |
| JR013 | * | B2 |
| JR016 | * | C0 |
| JR017 | * | C1 |
| JR018 | * | C1 |
| JR019 | * | D2 |
| JR020 | * | D1 |
| JR021 | * | D1 |
| JR022 | * | D1 |
| JR023 | * | D0 |
| JR024 | * | E3 |
| JR026 | * | D1 |
| JR027 | * | F2 |
| JR028 | * | E2 |
| JR029 | * | G0 |
| JR030 | * | E2 |
| JR031 | * | E3 |
| JR033 | | F0 |
| JR035 | * | G3 |
| JR036 | * | G3 |
| JR038 | * | F4 |
| JR040 | * | G4 |
| JR045 | * | C3 |
| JR100 | | A0 |
| JR102 | | C3 |
| JR103 | | B3 |
| JR104 | | C1 |
| JR105 | | D1 |
| JR106 | | D1 |
| JR107 | | C3 |
| JR108 | | C3 |
| JR109 | | C3 |
| JR110 | | D3 |
| JR111 | | D3 |
| JR112 | | D3 |
| JR114 | | D3 |
| JR116 | | D4 |
| JR117 | | D4 |
| JR118 | | D4 |
| JR119 | | E4 |
| JR120 | | E4 |
| JR121 | | E4 |
| JR122 | | E4 |
| JR123 | | E4 |
| JR125 | | E3 |
| JR126 | | E3 |
| JR127 | | E4 |
| JR128 | | F3 |
| JR129 | | E2 |
| JR131 | | E1 |
| JR132 | | E1 |
| JR133 | | E1 |
| JR134 | | F1 |
| JR137 | | G0 |
| JR138 | | G0 |
| JR139 | | F1 |
| JR140 | | G1 |
| JR141 | | G1 |
| JR142 | | F2 |
| JR146 | | F3 |
| JR147 | | F3 |
| JR148 | | F4 |
| JR149 | | F4 |
| JR150 | | G4 |

| | | |
|---|---|---|
| JR151 | | G4 |
| JR152 | | G3 |
| JR153 | | G3 |
| JR154 | | G3 |
| JR155 | | G3 |
| JR156 | | G4 |
| JR160 | | G5 |
| JR161 | | G5 |
| JR162 | | G2 |
| JR163 | | G2 |
| JR165 | | G1 |
| JR166 | | B6 |
| JR167 | | B6 |
| JR168 | | B7 |
| JR171 | | C1 |
| JR172 | | F4 |
| JR173 | | E1 |
| JR174 | | D0 |
| JR175 | | F3 |
| JR901 | * | B0 |
| JR902 | * | D0 |
| JR903 | * | B1 |
| JR904 | * | B1 |
| JR905 | * | B0 |
| JR906 | * | F3 |
| JR907 | | F2 |
| JR908 | * | B0 |
| JV001 | | H7 |
| JV002 | | K6 |
| JV003 | | G8 |
| JV004 | | G5 |
| JV005 | | F6 |
| JV006 | * | G7 |
| JV007 | * | H6 |
| JV009 | | K5 |
| JV010 | * | L5 |
| JV011 | | K6 |
| JV012 | | K6 |
| JV013 | * | H6 |
| JV014 | * | H6 |
| JV015 | | G5 |
| JV016 | | J10 |
| JV017 | * | J5 |
| JV021 | | K6 |
| JV022 | | K6 |
| JV023 | | J5 |
| JV031 | * | G4 |
| JV032 | * | G4 |
| JV033 | | G4 |
| JV034 | | G4 |
| JX002 | | E8 |
| JX003 | * | E8 |
| JX004 | * | E8 |
| JX005 | | G8 |
| JX006 | | F8 |
| JX007 | | F8 |
| JX008 | | F9 |
| JX009 | | G8 |
| JX010 | | E9 |
| JX011 | | G9 |
| JX012 | | G9 |
| JX013 | | F8 |
| JX014 | | G10 |
| JX015 | | G9 |
| JX016 | | G9 |
| JX017 | | G9 |
| JX019 | | G10 |
| JX020 | | H11 |
| JX021 | | E11 |
| JX022 | | E10 |
| JX023 | * | E9 |
| JX024 | | F8 |
| JX025 | * | D11 |
| JX050 | * | E10 |
| JX051 | * | E11 |
| JX055 | | E8 |
| JX056 | * | F8 |
| JX920 | | G9 |
| JX923 | | F10 |

| | | |
|---|---|---|
| LH004 | | C9 |
| LH004 | | C9 |
| LI020 | | C5 |
| LI051 | | E5 |
| LI053 | | E7 |
| LI070 | | E5 |
| LI090 | | F7 |
| LL001 | | R7 |
| LL006 | | M5 |
| LL008 | | M8 |
| LL029 | | P10 |
| LL030 | | Q9 |
| LL031 | | R8 |
| LL032 | | R11 |
| LL033 | | N11 |
| LL034 | | M10 |
| LL037 | | P9 |
| LL043 | | K8 |
| LL045 | | H9 |
| LL046 | | P7 |
| LL047 | | P7 |
| LL084 | | N6 |

| | | |
|---|---|---|
| LP019 | | Q2 |
| LP020 | | N3 |
| LP020 | | N3 |
| LP021 | | Q2 |
| LP040 | | L0 |
| LP060 | | N1 |
| LP070 | | L3 |
| LP112 | | Q5 |
| LP112 | | Q5 |
| LP140 | | L4 |
| LR002 | * | D0 |
| LR003 | | E0 |
| LR004 | | D3 |
| LR005 | | B2 |
| LR011 | * | D3 |
| LR012 | * | C1 |
| LR025 | * | B1 |

| | | |
|---|---|---|
| PI030 | | E7 |
| PI035 | | D8 |
| PI050 | | D7 |

| | | |
|---|---|---|
| QI053 | | D7 |
| QI070 | | E5 |
| QR001 | | D3 |

| | | |
|---|---|---|
| RA001 | * | A1 |
| RA002 | * | A0 |
| RA003 | * | B3 |
| RA004 | * | B4 |
| RA005 | * | A3 |
| RA006 | * | A3 |
| RA007 | * | A3 |
| RA008 | * | A4 |
| RA009 | * | B4 |
| RA010 | * | B4 |
| RA011 | * | B3 |
| RA012 | * | B4 |
| RA013 | | A5 |
| RA014 | | C3 |
| RA015 | * | A2 |
| RA016 | * | A0 |
| RA017 | * | A1 |
| RA018 | * | A1 |
| RA019 | | E3 |
| RA020 | * | A10 |
| RA021 | * | A10 |
| RA022 | * | A10 |
| RA023 | * | A10 |
| RA024 | * | A9 |
| RA025 | * | A9 |
| RA026 | * | A9 |
| RA027 | * | A8 |
| RA028 | * | A9 |
| RA029 | * | A0 |
| RA030 | | A7 |
| RA031 | * | A2 |
| RA032 | * | A10 |
| RA033 | * | A10 |
| RA034 | * | B4 |
| RA035 | * | A1 |
| RA040 | * | A9 |
| RF002 | * | K10 |
| RF003 | | K10 |
| RF007 | * | K10 |
| RF011 | | L10 |
| RF012 | | K9 |
| RF013 | | K9 |
| RF015 | | K9 |
| RF020 | | L10 |
| RF023 | * | K9 |
| RF024 | * | J9 |
| RF025 | * | K9 |
| RF026 | | J8 |
| RF036 | * | K9 |
| RF123 | * | K9 |
| RF124 | * | J9 |
| RH001 | * | C10 |
| RH002 | * | C9 |
| RH003 | * | C9 |
| RH004 | * | C9 |
| RH007 | | D9 |
| RH008 | | H9 |
| RH010 | * | C10 |
| RH011 | * | C10 |
| RI001 | * | C7 |
| RI002 | * | E4 |
| RI003 | * | C5 |
| RI004 | * | B7 |
| RI005 | * | C5 |
| RI006 | * | C5 |
| RI007 | * | D7 |
| RI008 | * | C7 |
| RI009 | * | C8 |
| RI012 | * | C6 |

| | | |
|---|---|---|
| RI019 | * | C5 |
| RI020 | * | C5 |
| RI021 | * | D7 |
| RI022 | * | C5 |
| RI023 | * | C6 |
| RI024 | * | C6 |
| RI025 | * | C6 |
| RI026 | * | C7 |
| RI027 | * | D7 |
| RI028 | * | D8 |
| RI029 | * | E8 |
| RI030 | * | E7 |
| RI031 | * | E7 |
| RI032 | * | F6 |
| RI033 | * | D8 |
| RI034 | * | C8 |
| RI035 | * | D8 |
| RI036 | | D8 |
| RI037 | * | E7 |
| RI038 | * | E8 |
| RI039 | * | E8 |
| RI040 | * | C5 |
| RI041 | * | C6 |
| RI042 | * | C5 |
| RI043 | * | C6 |
| RI044 | * | C6 |
| RI045 | * | D8 |
| RI049 | * | E6 |
| RI050 | * | E6 |
| RI051 | * | E6 |
| RI052 | * | F6 |
| RI053 | * | E7 |
| RI054 | * | C6 |
| RI055 | * | E7 |
| RI056 | * | E5 |
| RI058 | * | D5 |
| RI059 | * | E5 |
| RI061 | * | E5 |
| RI062 | * | D5 |
| RI065 | * | D5 |
| RI066 | * | D6 |
| RI070 | * | F5 |
| RI071 | * | F5 |
| RI072 | * | E5 |
| RI073 | * | E5 |
| RI074 | * | E5 |
| RI075 | * | F5 |
| RI076 | * | D5 |
| RI077 | * | E6 |
| RI078 | * | F4 |
| RI079 | * | E4 |
| RI082 | * | E5 |
| RI083 | * | D5 |
| RI084 | * | D4 |
| RI090 | * | E8 |
| RI091 | * | E7 |
| RI092 | * | F7 |
| RI093 | * | F7 |
| RI094 | * | E8 |
| RI095 | * | D8 |
| RL001 | * | J5 |
| RL002 | * | J5 |
| RL003 | * | J5 |
| RL004 | | Q6 |
| RL004 | | Q6 |
| RL013 | | Q6 |
| RL014 | * | R7 |
| RL015 | | R6 |
| RL016 | * | R7 |
| RL017 | * | R7 |
| RL018 | * | R7 |
| RL020 | * | J7 |
| RL021 | * | K6 |
| RL023 | | K6 |
| RL024 | * | H8 |
| RL025 | | K6 |
| RL026 | * | P11 |
| RL027 | * | P11 |
| RL028 | | K6 |
| RL029 | | P11 |
| RL030 | | Q10 |
| RL030 | | Q10 |
| RL031 | * | P11 |
| RL037 | | P9 |
| RL040 | | K8 |
| RL043 | | K8 |
| RL044 | * | L6 |
| RL045 | * | L11 |
| RL046 | * | N7 |
| RL047 | | Q6 |
| RL048 | * | P7 |
| RL050 | * | L6 |
| RL051 | * | K7 |
| RL052 | | M6 |
| RL053 | * | M6 |
| RL054 | * | M6 |
| RL055 | * | L7 |
| RL056 | * | L7 |
| RL057 | * | M7 |
| RL058 | * | L7 |
| RL063 | * | M7 |
| RL064 | * | P6 |
| RL065 | * | Q6 |
| RL066 | * | Q7 |
| RL067 | * | Q9 |
| RL068 | * | Q9 |

| | | |
|---|---|---|
| RL069 | * | Q9 |
| RL070 | * | M7 |
| RL071 | * | L9 |
| RL072 | * | K9 |
| RL073 | * | N6 |
| RL080 | * | J6 |
| RL081 | | K5 |
| RL082 | | L6 |
| RL084 | | P6 |
| RL092 | * | L7 |
| RL093 | * | L9 |
| RL124 | * | N9 |
| RL125 | * | N9 |
| RL126 | * | M9 |
| RL127 | * | M9 |
| RL129 | | P10 |
| RL134 | * | N9 |
| RL135 | * | N9 |
| RL136 | * | M9 |
| RL137 | * | M9 |
| RL146 | * | Q7 |
| RL155 | * | L7 |
| RL160 | * | L7 |
| RL171 | * | L9 |
| RL211 | * | L8 |
| RL214 | * | K7 |
| RP020 | | P0 |
| RP022 | | N1 |
| RP025 | * | K2 |
| RP025 | * | K2 |
| RP025 | | K2 |
| RP026 | * | K2 |
| RP027 | * | K1 |
| RP028 | | L1 |
| RP029 | * | L1 |
| RP030 | | L1 |
| RP031 | | L1 |
| RP032 | | M1 |
| RP040 | | L0 |
| RP040 | | L0 |
| RP041 | * | M0 |
| RP042 | * | M0 |
| RP050 | | M2 |
| RP053 | | L1 |
| RP054 | * | K1 |
| RP054 | * | K1 |
| RP055 | | L1 |
| RP059 | * | J1 |
| RP060 | * | K1 |
| RP061 | * | K1 |
| RP062 | | J0 |
| RP063 | * | K0 |
| RP064 | * | J0 |
| RP065 | * | K0 |
| RP066 | | L1 |
| RP067 | * | M0 |
| RP068 | * | L1 |
| RP069 | * | L0 |
| RP070 | * | L2 |
| RP071 | * | K1 |
| RP072 | * | K0 |
| RP100 | | R3 |
| RP102 | * | M3 |
| RP112 | | R4 |
| RP112 | | R5 |
| RP120 | * | M5 |
| RP121 | * | L5 |
| RP122 | * | M5 |
| RP123 | * | K4 |
| RP124 | * | K4 |
| RP125 | * | L4 |
| RP126 | * | K5 |
| RP127 | * | K5 |
| RP128 | | K5 |
| RP129 | * | K5 |
| RP130 | | L5 |
| RP138 | * | J3 |
| RP139 | * | K4 |
| RP140 | * | H2 |
| RP141 | * | H2 |
| RP142 | * | H2 |
| RP143 | * | J2 |
| RP144 | * | H0 |
| RP145 | * | H0 |
| RP146 | * | H1 |
| RP147 | * | H0 |
| RP148 | * | H1 |
| RP149 | * | J1 |
| RP150 | * | P4 |
| RP151 | * | P4 |
| RP152 | * | N5 |
| RP156 | | N4 |
| RP157 | * | N4 |
| RP158 | * | P4 |
| RP159 | * | N4 |
| RP160 | * | J4 |
| RP161 | * | L4 |
| RP162 | * | K3 |
| RP163 | * | L3 |
| RP164 | * | H1 |
| RP165 | * | H1 |
| RP166 | * | H0 |
| RP167 | * | H0 |
| RP168 | * | G0 |
| RP170 | * | K6 |
| RP171 | * | H4 |

| | | |
|---|---|---|
| RP172 | * | J4 |
| RP173 | | K6 |
| RP175 | * | H4 |
| RP176 | * | H4 |
| RP177 | * | H3 |
| RP179 | * | J4 |
| RP190 | * | A1 |
| RP191 | * | A1 |
| RP192 | * | A2 |
| RP193 | * | A1 |
| RP194 | * | B2 |
| RR010 | * | D1 |
| RR011 | * | C2 |
| RR012 | * | C2 |
| RR013 | * | F0 |
| RR014 | * | G0 |
| RR015 | | D1 |
| RR016 | | D2 |
| RR017 | | D1 |
| RR018 | | F2 |
| RR019 | | F2 |
| RR021 | | D4 |
| RR024 | * | F3 |
| RR025 | * | E0 |
| RR026 | * | E0 |
| RR027 | * | E1 |
| RR028 | * | D2 |
| RR029 | * | F0 |
| RR030 | * | F0 |
| RR031 | * | F0 |
| RR032 | | E3 |
| RR033 | | E3 |
| RR034 | | E3 |
| RR035 | | E3 |
| RR036 | * | F0 |
| RR037 | * | E0 |
| RR038 | * | E0 |
| RR039 | * | E0 |
| RR040 | * | E0 |
| RR041 | * | E1 |
| RR042 | * | F1 |
| RR043 | * | F1 |
| RR044 | * | C2 |
| RR045 | * | C2 |
| RR046 | * | F1 |
| RR047 | * | F2 |
| RR048 | * | F2 |
| RR049 | * | F2 |
| RR050 | * | B2 |
| RR051 | * | B1 |
| RR052 | * | B2 |
| RR053 | * | C2 |
| RR055 | * | C2 |
| RR056 | * | C2 |
| RR057 | * | E3 |
| RR060 | * | B2 |
| RR061 | * | B1 |
| RR062 | * | B3 |
| RR063 | * | B2 |
| RR065 | * | C2 |
| RR066 | * | C2 |
| RR067 | * | B2 |
| RR070 | * | B2 |
| RR071 | * | B3 |
| RR072 | | B2 |
| RR075 | * | B1 |
| RR076 | * | B1 |
| RR084 | * | G1 |
| RR085 | | G2 |
| RR086 | | C4 |
| RR087 | | E2 |
| RR088 | | C4 |
| RR089 | | E2 |
| RR091 | * | G0 |
| RR093 | * | F1 |
| RR097 | * | F3 |
| RR098 | * | G1 |
| RR099 | * | G1 |
| RR100 | * | C2 |
| RR103 | * | G4 |
| RR104 | * | E1 |
| RR105 | * | G1 |
| RR106 | * | G0 |
| RR107 | * | G1 |
| RR171 | * | B2 |
| RR910 | * | F4 |
| RR924 | * | E2 |
| RV001 | * | H8 |
| RV002 | | H7 |
| RV003 | * | J7 |
| RV011 | * | H9 |
| RV012 | * | H8 |
| RV021 | * | C5 |
| RV022 | * | J5 |
| RV038 | * | G5 |
| RV041 | * | G7 |
| RV052 | * | G6 |
| RV061 | * | H6 |
| RV062 | * | H6 |
| RV063 | * | H5 |
| RV064 | | H5 |
| RV066 | * | H5 |
| RV071 | * | J6 |
| RV072 | * | H6 |
| RV073 | * | H5 |
| RV074 | | H5 |

| | | |
|---|---|---|
| RV076 | * | H5 |
| RV081 | | J6 |
| RV082 | * | H6 |
| RV083 | * | H5 |
| RV084 | | H5 |
| RV086 | * | H5 |
| RV091 | * | H6 |
| RV092 | * | H6 |
| RV101 | * | L6 |
| RV107 | * | J5 |
| RV108 | * | K6 |
| RV109 | * | K5 |
| RV110 | * | L6 |
| RV112 | * | K6 |
| RV206 | * | H7 |
| RV213 | * | J6 |
| RV216 | * | J6 |
| RV221 | * | K7 |
| RV222 | * | K6 |
| RV223 | * | K7 |
| RV231 | | K7 |
| RV232 | | J7 |
| RV233 | | J7 |
| RV241 | * | J5 |
| RV242 | * | J5 |
| RX107 | * | H11 |
| RX111 | * | H11 |
| RX115 | * | H11 |
| RX116 | * | H10 |
| RX120 | * | H10 |
| RX121 | * | H10 |
| RX122 | | G10 |
| RX130 | * | J11 |
| RX131 | * | F8 |
| RX132 | * | F8 |
| RX133 | * | F8 |
| RX134 | * | F8 |
| RX140 | * | J11 |
| RX150 | * | F10 |
| RX151 | * | F10 |
| RX215 | * | E11 |
| RX220 | * | F11 |
| RX221 | * | E11 |
| RX250 | * | E10 |
| RX251 | * | E10 |
| RX280 | * | B8 |
| RX281 | * | D10 |
| RX282 | * | D10 |
| RX301 | * | E11 |
| RX303 | * | E11 |
| RX350 | * | E10 |
| RX351 | * | E10 |
| RX900 | | F10 |
| RX910 | | G10 |
| RX911 | * | H10 |
| RX912 | * | H10 |
| RX920 | * | D9 |
| RX921 | * | D10 |
| RX922 | * | D10 |
| RX950 | * | F9 |
| RX951 | * | G8 |
| RX955 | * | E9 |
| RX956 | * | E9 |
| RX960 | * | F9 |
| RX961 | * | G8 |
| RX965 | * | E9 |
| RX966 | * | E9 |
| RX991 | | H9 |
| RX992 | | D9 |

| | | |
|---|---|---|
| TA001 | * | A0 |
| TA002 | * | A0 |
| TI010 | * | C5 |
| TI020 | * | C6 |
| TI030 | * | D8 |
| TI031 | * | D8 |
| TI032 | * | D8 |
| TI033 | * | F6 |
| TI034 | * | E8 |
| TI040 | * | D5 |
| TI045 | * | D5 |
| TI050 | * | C6 |
| TI070 | * | E4 |
| TI090 | * | E7 |
| TI091 | * | E7 |
| TI092 | * | D8 |
| TI093 | * | D8 |
| TL001 | * | K5 |
| TL004 | | Q6 |
| TL005 | | R6 |
| TL028 | * | Q11 |
| TL028 | | Q11 |
| TL030 | | R8 |
| TL030 | | R9 |
| TL062 | * | K7 |
| TL063 | * | M6 |
| TP025 | | K2 |
| TP026 | * | K2 |
| TP027 | * | J0 |
| TP060 | | N0 |
| TP070 | * | J0 |
| TP129 | * | L5 |

| | | |
|---|---|---|
| TP145 | * | H2 |
| TP146 | | J2 |
| TP150 | * | N5 |
| TP152 | * | N4 |
| TP161 | * | K3 |
| TP162 | * | K3 |
| TP166 | * | H0 |
| TP167 | * | G0 |
| TP170 | * | K6 |
| TP175 | * | H4 |
| TP190 | * | A1 |
| TR002 | * | F0 |
| TR048 | * | F2 |
| TR091 | * | G0 |
| TR095 | * | F2 |
| TR102 | * | G4 |
| TR105 | * | G1 |
| TR106 | * | G2 |
| TV002 | | H7 |
| TV063 | * | H5 |
| TV073 | * | H5 |
| TV083 | * | H5 |
| TV108 | | K6 |
| TX910 | | H10 |
| TX920 | | D10 |
| TX950 | | F9 |
| TX955 | * | E9 |
| TX960 | * | F9 |
| TX965 | * | E9 |

**RP C19**
First issue 07 / 98



Updated 07 / 99

SOLDER SIDE - CÔTE SOUDURES - LÖTSEITE - LATO SALDATURE - LADO SOLDADURAS

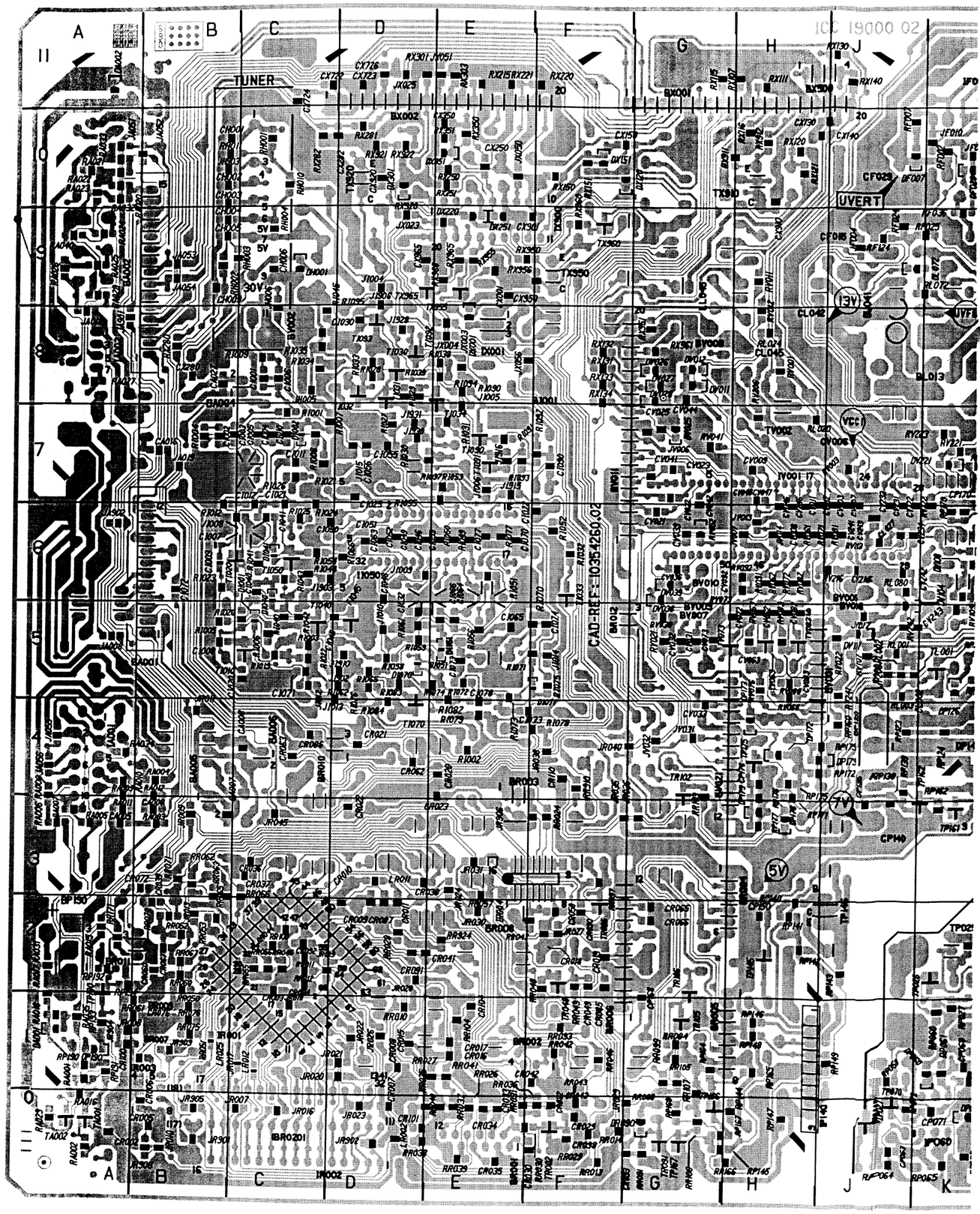

| | | |
|---|---|---|
| 145 | • | H2 |
| 146 | | J2 |
| 150 | • | N5 |
| 152 | • | N4 |
| 161 | • | K3 |
| 162 | • | K3 |
| 166 | • | H0 |
| 167 | • | G0 |
| 170 | • | K6 |
| 175 | • | H4 |
| 190 | • | A1 |
| 202 | • | F0 |
| 248 | • | F2 |
| 291 | • | G0 |
| 295 | • | F2 |
| 302 | • | G4 |
| 305 | • | G1 |
| 306 | • | G2 |
| 352 | | H7 |
| 353 | • | H5 |
| 373 | • | H5 |
| 383 | • | H5 |
| 398 | | K6 |
| 410 | | H10 |
| 420 | | D10 |
| 450 | | F9 |
| 455 | • | E9 |
| 480 | • | F9 |
| 485 | • | E9 |

## SOLDER SIDE - CÔTE SOUDURES - LÖTSEITE - LATO SALDATURE - LADO SOLDADURAS

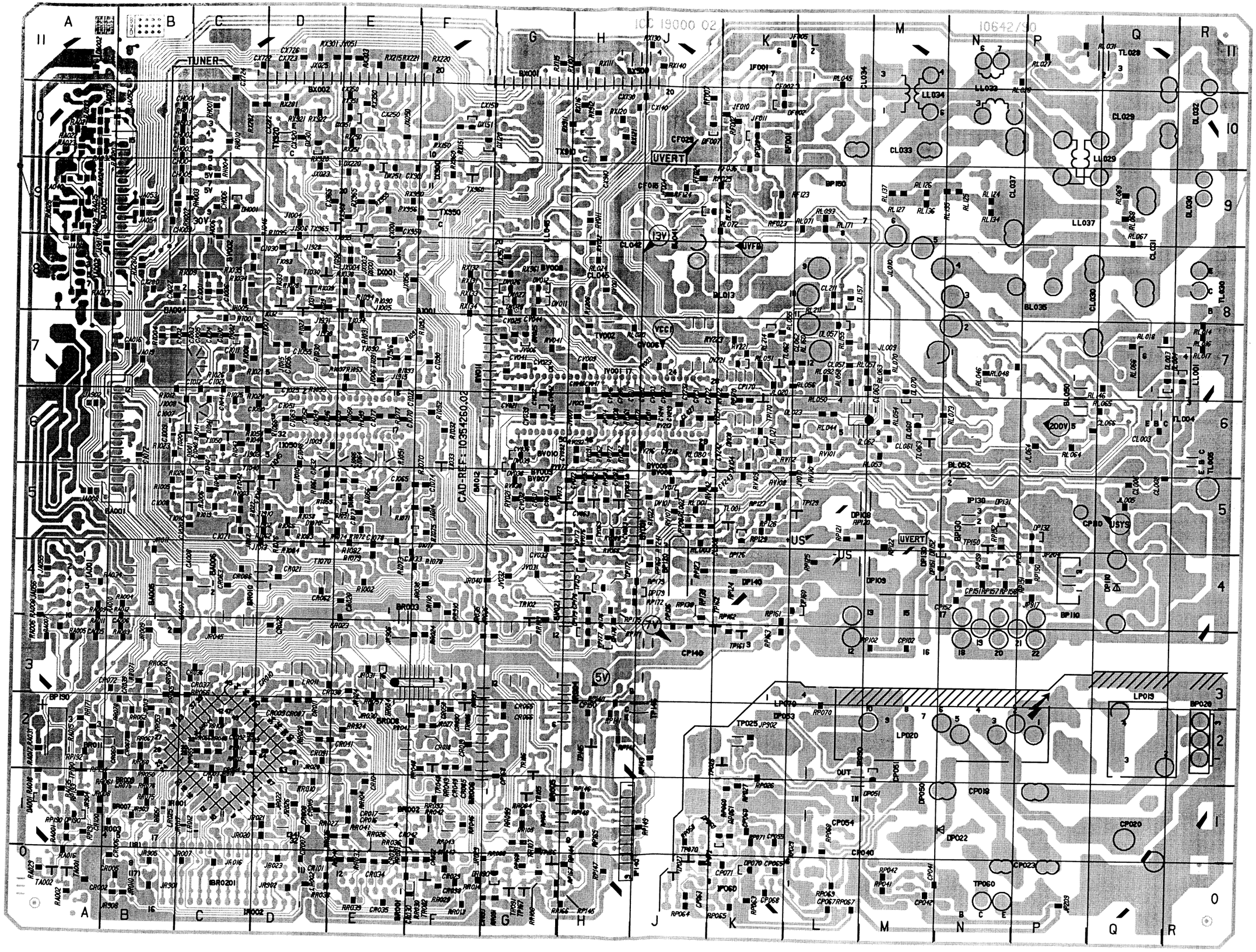

# MAIN SCHEMATIC DIAGRAM - SCHEMA PLATINE PRINCIPALE - SCHALTUNG HAUPTPLATINE - SCHEMA PIASTRA PRINCIPALE - ESQUEMA PLATINA PRINCIPAL

CONVERGENCE UNIT POWER SUPPLY
ALIMENTATION PLATINE DE CONVERGENCE
DIGITAL CONVERGENCE UNIT NETZTEIL
ALIMENTAZIONE CONVERGENCE UNIT
ALIMENTACIÓN CONVERGENCE UNIT

**PS. RP19.00**
**PS. RP19.90**

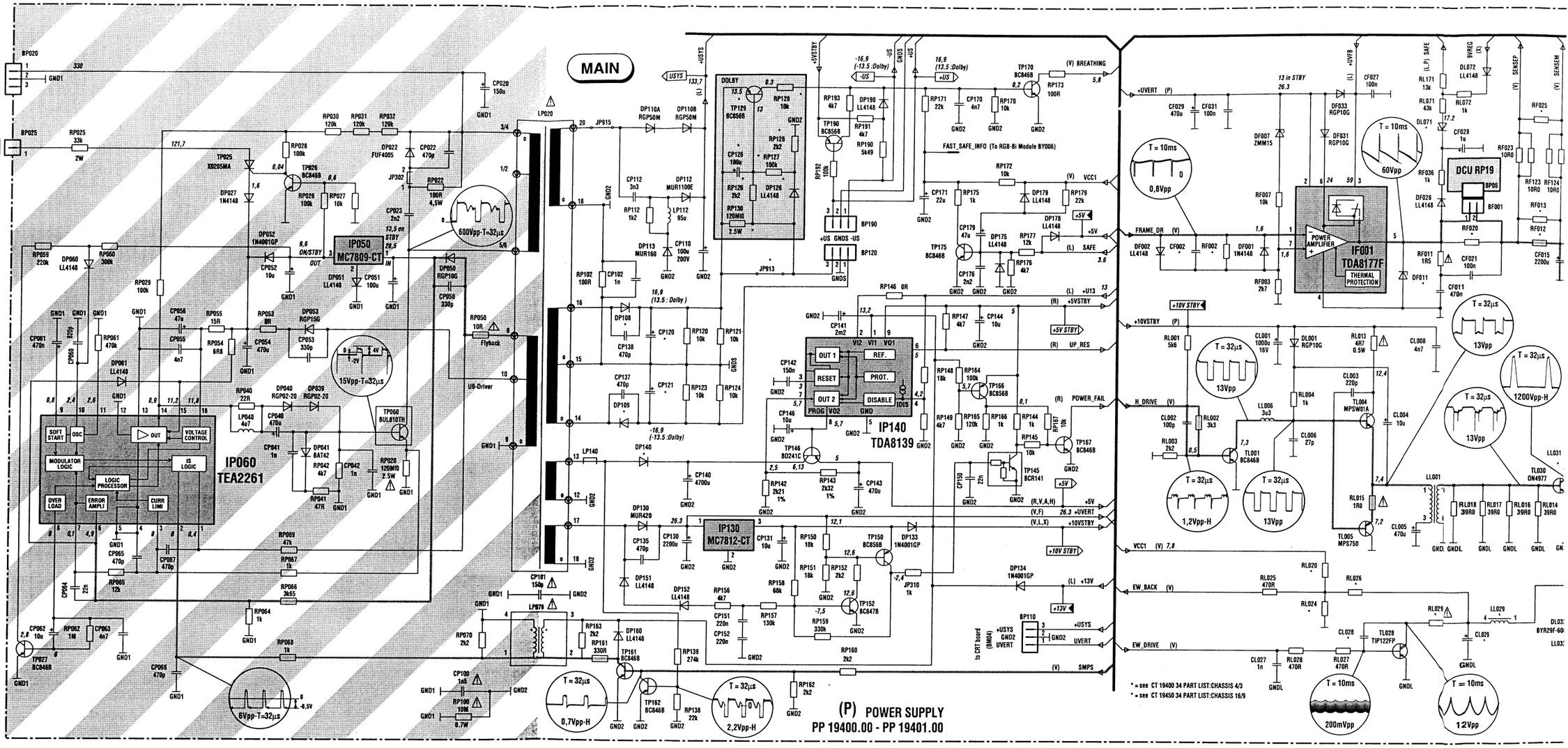


**DESIGNATON POWER**
**PP.19400.00, PP.19401.00**

| * | PP 19400 00 10530090 | PP 19401 00 10534010 |
|---|---|---|
| | 100Hz/Stereo | 100Hz/Dolby |
| CP120 | 470u0/35V | 330u0/25V |
| CP121 | 470u0/35V | 1MI0/25V |
| CP126 | - | X |
| DP108/109 | RGP30D | BYW029-150 |
| DP126 | - | X |
| DP140 | BYW029-150 | BYV63-150 |
| JP913 | X | - |
| RP126/128 | - | X |
| RP127/129 | - | X |
| RP130 | - | X |
| TP129 | - | X |

X Inserted
– Not inserted

Part of board connected to mains supply.
Partie du chassis reliée au secteur.
Primärseite des Netzteils.
Parte dello châssis collegata alla rete.
Parte del chassis conectada a la red.

Use isolating mains transformer
Utilise un transformateur isolateur du secteur
Einen Trenntrafo verwenden
Utilizar un transformador aislador de red
Utilizzare un transformatore per isolarvi dalla rete

**Note :**
Power Supply primary circuit measurements.
- Use only ( GND1) connection point.
**Attention :**
Mesure dans la partie primaire de l'alimentation
- Utiliser la masse du bloc alimentation ( GND1 ).
**Achtung :**
Bei Messungen im Primärnetzteil
- Primärnetzteilmasse verwenden ( GND1 ).
**Attenzione :**
misure nell'alimentatore primario
- usare massa alimentazione primario ( GND1 ).
**Cuidado :**
Medida en el bloque de alimentacion
- Utilizar la masa del bloque de alimentacion ( GND1 ).

Safety Part
When repairing, use original part only
Piece de securite
N'utilisez que les pieces d'origine
Sicherheitsbauteil
Bei Ersatz nur Originalteil verwenden
Componenti di sicurezza
Per la riparazione utilizzare solo componenti originali
Pieza de seguridad
Utilice solo piezas originales

| * | Deflection - Basic Partlists | |
|---|---|---|
| | 100Hz 4/3 | 100Hz 16/9 |
| | CT 19400 34 | CT 19450 34 |
| | 10 53 01 10 | 10 61 54 40 |
| CF002 | 680p +/-10% 50V | |
| CL028 | 1n +10% 100V | |
| CL029 | 3u3 +20% 63V | |
| CL030 | 1n9 +/- 5% 2kV | |
| CL031 | 10n +/- 3.5% 1k5V | |
| CL032 | 20n +/-5% 400V | |
| CL036 | 2u2 +20% 250V | |
| CL037 | 510n +/-5% 250V | |
| CL211 | 470p +/-10% 50V | |
| DF011 | BZW04-48 56V | |
| DL034 | EGP10D 200V | |
| DL036 | EGP10D 200V | |
| DL071 | BZX55C20 20V | |
| DL092 | SLP 1N4148 100V | |
| LL008 | TF-DST-GDS35 | |
| LL029 | 130u0H +/-5% | |
| LL030 | 900HM 50MHz | |
| LL031 | WIREBARE | |
| LL037 | 9u0H +10% | |
| LL046 | 22u0H +10% | |
| LL047 | 14u5H +/-5% | |
| RF002 | 10k +5% | |
| RF012 | 1R0 +1% | 1R82 +1% |
| RF013 | 1R21 +1% | |

| * | Deflection - Basic Part | |
|---|---|---|
| | 100Hz 4/3 | 100Hz |
| | CT 19400 34 | CT 1945 |
| | 10 53 01 10 | 10 61 54 |
| RF020 | 270R +1% | |
| RF025 | 100R +5% | 120R + |
| RL020 | 7k15 +1% | |
| RL024 | 4k02 +1% | |
| RL026 | 61k9 +1% | |
| RL029 | 2R2 +5% | |
| RL030 | 2R2 +5% | |
| RL046 | 3k3 +5% | |
| RL048 | 3k3 +5% | |
| RL051 | 270k +5% | |
| RL053 | 16k2 +1% | 30k9 + |
| RL057 | 60k4 +1% | |
| RL066 | 4k22 +1% | |
| RL082 | 59k +1% | |
| RL092 | 4k7 +5% | |
| RL124 | 7k5 +5% | |
| RL125 | 7k5 +5% | |
| RL126 | 7k5 +5% | |
| RL127 | 7k5 +5% | |
| RL134 | 7k5 +5% | |
| RL135 | 7k5 +5% | |
| RL136 | 7k5 +5% | |
| RL137 | 7k5 +5% | |
| RL211 | 6k8 +5% | |

# UPTPLATINE - SCHEMA PIASTRA PRINCIPALE - ESQUEMA PLATINA PRINCIPAL

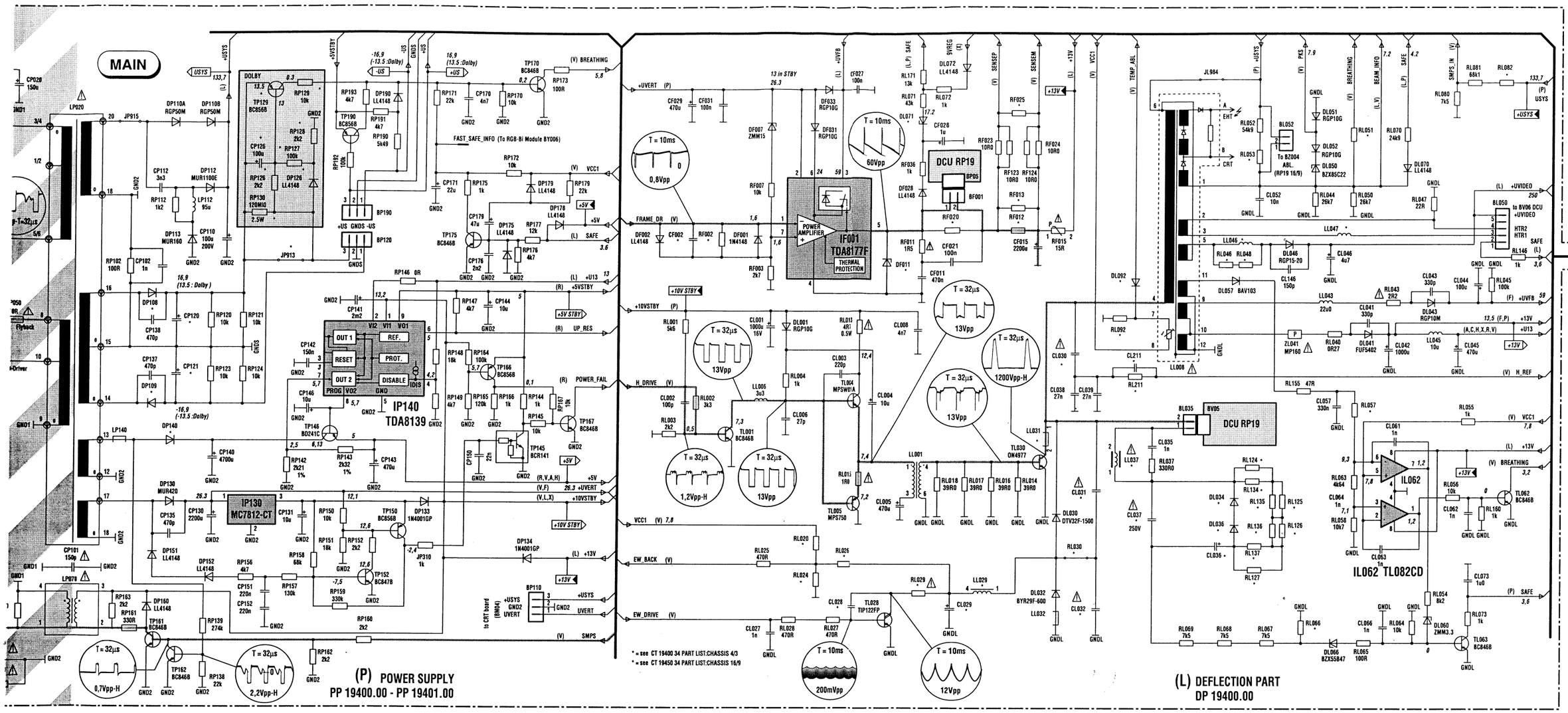


**Note :**
Power Supply primary circuit measurements.
- Use only ( GND1) connection point.

**Attention :**
Mesure dans la partie primaire de l'alimentation
- Utiliser la masse du bloc alimentation ( GND1 ).

**Achtung :**
Bei Messungen im Primärnetzteil
- Primärnetzteilmasse verwenden ( GND1 ).

**Attenzione :**
misure nell'alimentatore primario
- usare massa alimentazione primario ( GND1 ).

**Cuidado :**
Medida en el bloque de alimentacion
- Utilizar la masa del bloque de alimentacion ( GND1 ).

⚠ Safety Part
When repairing, use original part only
Piece de securite
N'utilisez que les pieces d'origine
Sicherheitsbauteil
Bei Ersatz nur Originalteil verwenden
Componenti di sicurezza
Per la riparazione utilizzare solo componenti originali
Pieza de seguridad
Utilice solo piezas originales

| * | Deflection - Basic Partlists | |
|---|---|---|
| | 100Hz 4/3 | 100Hz 16/9 |
| | CT 19400 34 | CT 19450 34 |
| | 10 53 01 10 | 10 61 54 40 |
| CF002 | 680p +/-10% 50V | |
| CL028 | 1n +10% 100V | |
| CL029 | 3u3 +20% 63V | |
| CL030 | 1n9 +/- 5% 2kV | |
| CL031 | 10n +/- 3.5% 1k5V | |
| CL032 | 20n +/-5% 400V | |
| CL036 | 2u2 +20% 250V | |
| CL037 | 510n +/-5% 250V | |
| CL211 | 470p +/-10% 50V | |
| DF011 | BZW04-48 56V | |
| DL034 | EGP10D 200V | |
| DL036 | EGP10D 200V | |
| DL071 | BZX55C20 20V | |
| DL092 | SLP 1N4148 100V | |
| LL008 | TF-DST-GDS35 | |
| LL029 | 130u0H +/-5% | |
| LL030 | 900HM 50MHz | |
| LL031 | WIREBARE | |
| LL037 | 9u0H +10% | |
| LL046 | 22u0H +10% | |
| LL047 | 14u5H +/-5% | |
| RF002 | 10k +5% | |
| RF012 | 1R0 +1% | 1R82 +1% |
| RF013 | 1R21 +1% | |

| * | Deflection - Basic Partlists | |
|---|---|---|
| | 100Hz 4/3 | 100Hz 16/9 |
| | CT 19400 34 | CT 19450 34 |
| | 10 53 01 10 | 10 61 54 40 |
| RF020 | 270R +1% | |
| RF025 | 100R +5% | 120R +5% |
| RL020 | 7k15 +1% | |
| RL024 | 4k02 +1% | |
| RL026 | 61k9 +1% | |
| RL029 | 2R2 +5% | |
| RL030 | 2R2 +5% | |
| RL046 | 3k3 +5% | |
| RL048 | 3k3 +5% | |
| RL051 | 270k +5% | |
| RL053 | 16k2 +1% | 30k9 +1% |
| RL057 | 60k4 +1% | |
| RL066 | 4k22 +1% | |
| RL082 | 59k +1% | |
| RL092 | 4k7 +5% | |
| RL124 | 7k5 +5% | |
| RL125 | 7k5 +5% | |
| RL126 | 7k5 +5% | |
| RL127 | 7k5 +5% | |
| RL134 | 7k5 +5% | |
| RL135 | 7k5 +5% | |
| RL136 | 7k5 +5% | |
| RL137 | 7k5 +5% | |
| RL211 | 6k8 +5% | |

Note : the last two numbers of the CT xxxx part list name indicates the system voltage.
e.g. CT 19400 34 → Usys 134V

Note : Les deux derniers chiffres de la liste des composants CT xxxx représentent la tension système.
ex. CT 19400 34 → Usys 134V

Nota: Los dos últimos números de la denominación CT xxxx, indica la tensión Usys
e.g. CT 19400 34 → Usys 134V

# COMPLETE PCB DIAGRAM - SCHEMA PLATINE EQUIPEE - SCHALTUNG LEITERPLATTE KPL - SCHEMA PIASTRA COMPLETA - ESQUEMA PLATINA EQUIPADA

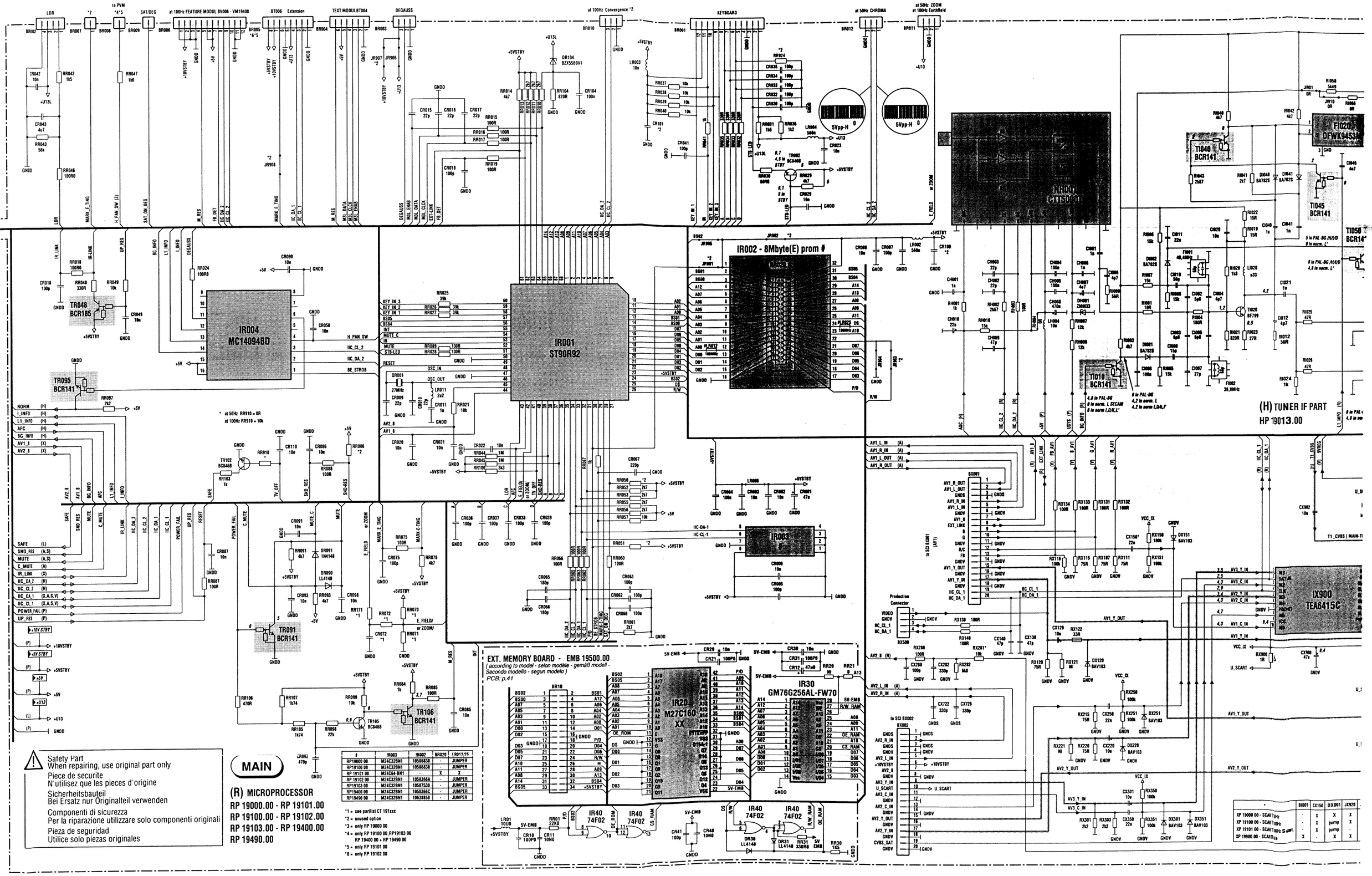


| # | IR003 | IR002 | BR020 | LR012/25 |
|---|---|---|---|---|
| RP19000 00 | M24C32BN1 | 10586838 | - | JUMPER |
| RP19100 00 | M24C32BN1 | 10586838 | - | JUMPER |
| RP 19101 00 | M24C64-BN1 | | X | X |
| RP 19102 00 | M24C32BN1 | 1058366A | - | JUMPER |
| RP19103 00 | M24C32BN1 | 10587538 | - | JUMPER |
| RP19400 00 | M24C32BN1 | 1058366C | - | JUMPER |
| RP19490 00 | M24C32BN1 | 10638858 | - | JUMPER |

*1 = see partlist CT 191xxx
*2 = unused option
*3 = only RP 19000 00
*4 = only RP 19100 00,RP19103 00
RP 19400 00 + RP 19490 00
*5 = only RP 19101 00
*6 = only RP 19102 00

| * | BI001 | CX150 | DX001 | JX920 |
|---|---|---|---|---|
| XP 19000 00 - SCART 50Hz | - | X | X | X |
| XP 19100 00 - SCART 50Hz | - | X | jump | X |
| XP 19101 00 - SCART 50Hz Small | - | X | jump | - |
| XP 19900 00 - SCART 60Hz | X | - | X | X |

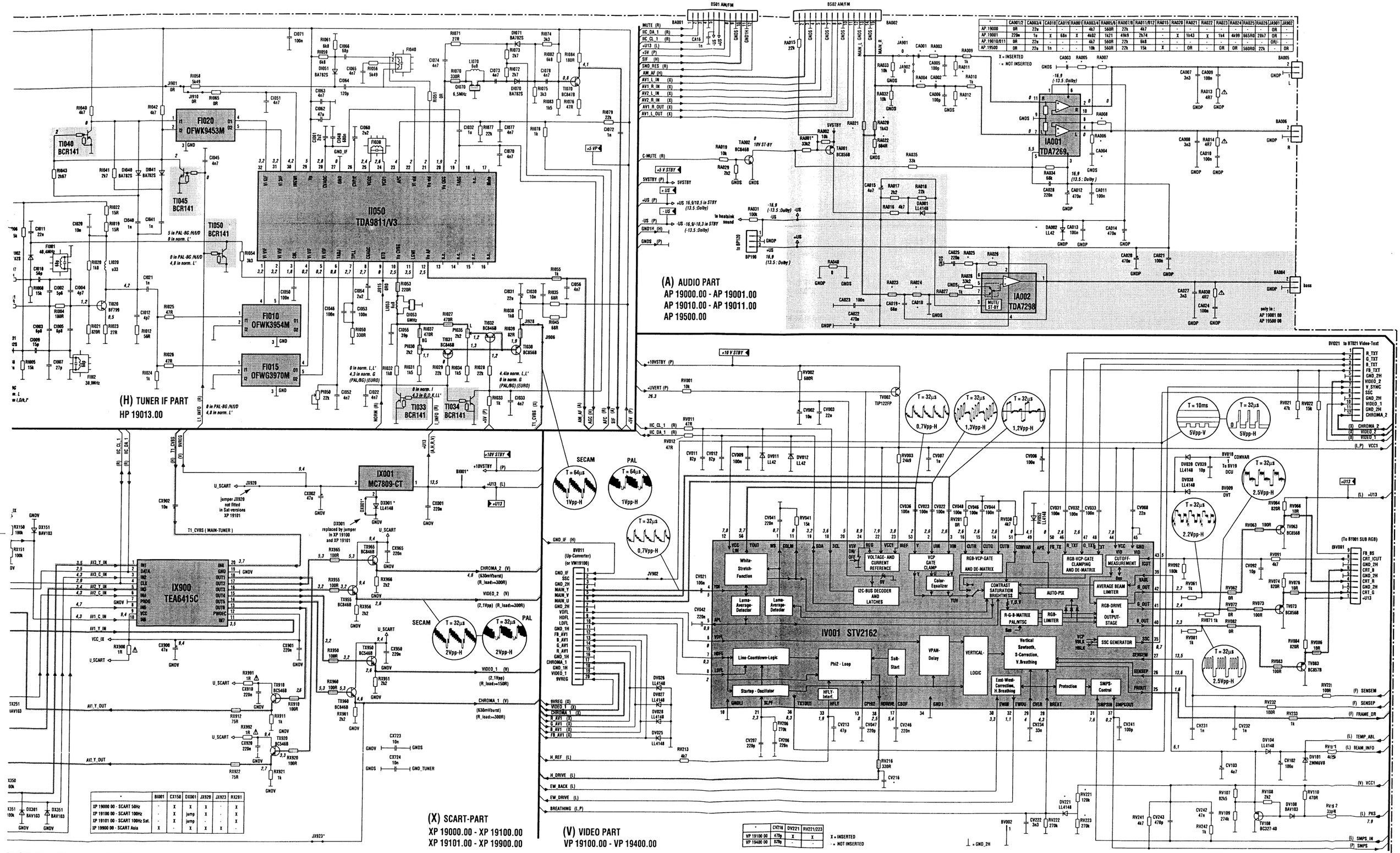


| * | CA001/2 | CA003/4 | CA018 | CA019 | RA001 | RA003/4 | RA005/6 | RA007/8 | RA011/012 | RA015 | RA020 | RA021 | RA022 | RA023 | RA024 | RA025 | RA026 | JA901 | JA902 |
|---|---|---|---|---|---|---|---|---|---|---|---|---|---|---|---|---|---|---|---|
| AP.19000 | 0R | 22u | - | - | - | 4k7 | 560R | 22k | 4k7 | - | - | - | - | - | - | - | - | OR | - |
| AP.19001 | 220n | 1u | X | 68n | X | 4k02 | 1k21 | 49k9 | 2k74 | - | X | 1k43 | X | 1k4 | 4k99 | 665R0 | 28k7 | OR | - |
| AP.19010/011 | 0R | 22u | - | - | - | 4k7 | 560R | 22k | 6k8 | - | - | - | - | - | - | - | - | OR/- | - |
| AP.19500 | 0R | 22u | 1n | - | - | 10k | 560R | 22k | 15k | X | - | OR | - | OR | OR | 560R0 | 22k | - | OR |

X = INSERTED
- = NOT INSERTED

| * | BI001 | CX150 | DX001 | JX920 | JX923 | RX281 |
|---|---|---|---|---|---|---|
| XP 19000 00 - SCART 50Hz | - | X | X | X | - | X |
| XP 19100 00 - SCART 100Hz | - | X | jump | X | - | X |
| XP 19101 00 - SCART 100Hz Sat. | - | X | jump | - | - | X |
| XP 19900 00 - SCART Asia | X | - | X | X | X | - |

| * | CV216 | DV221 | RV221/223 |
|---|---|---|---|
| VP 19100 00 | 470p | X | X |
| VP 19400 00 | 820p | - | - |

X = INSERTED
- = NOT INSERTED

# VIDEO AMPLIFIER BOARD - PLATINE AMPLIFICATEURS VIDEO - VIDEOVERSTÄRKERPLATTE - PIASTRA AMPLIFICATORE VIDEO - PLATINA AMPLIFICADOR VIDEO

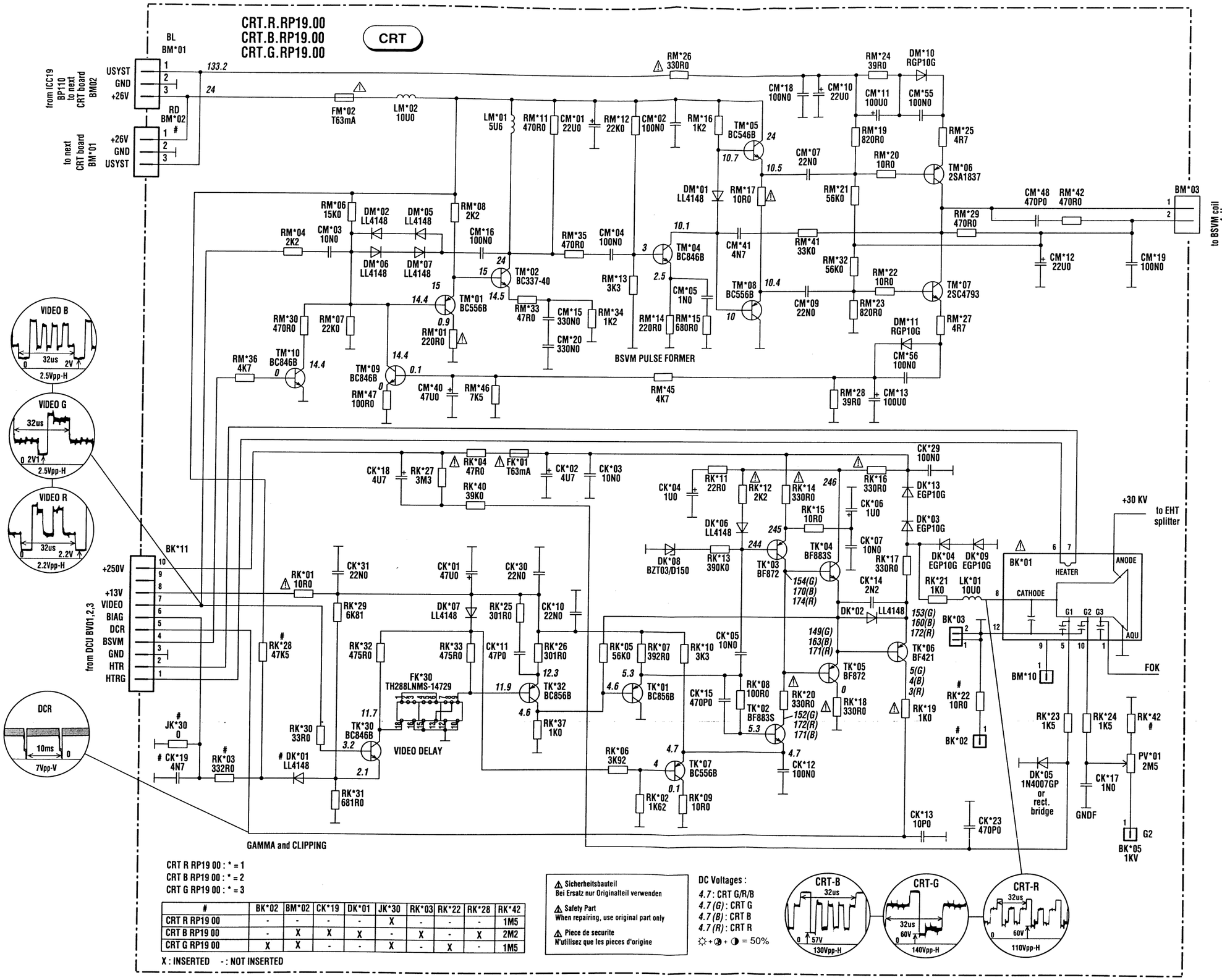


| # | BK*02 | BM*02 | CK*19 | DK*01 | JK*30 | RK*03 | RK*22 | RK*28 | RK*42 |
|---|---|---|---|---|---|---|---|---|---|
| CRT R RP19 00 | - | - | - | - | X | - | - | - | 1M5 |
| CRT B RP19 00 | - | X | X | X | - | X | - | X | 2M2 |
| CRT G RP19 00 | X | X | - | - | X | - | X | - | 1M5 |

X : INSERTED - : NOT INSERTED

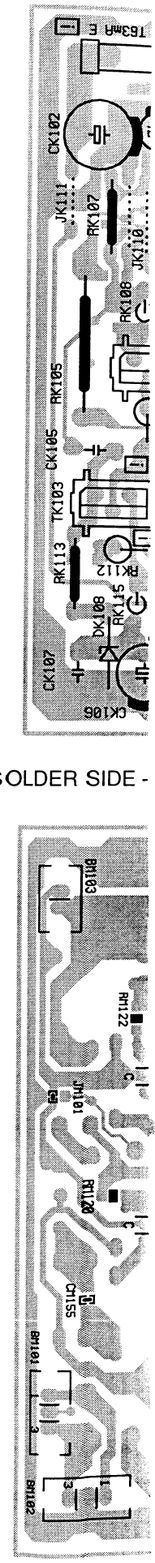


SOLDER SIDE -

## CRT R - RP19

COMPONENT SIDE - COTE COMPOSANTS - BESTÜCKUNGSSEITE
LATO COMPONENTI - LADO COMPONENTES

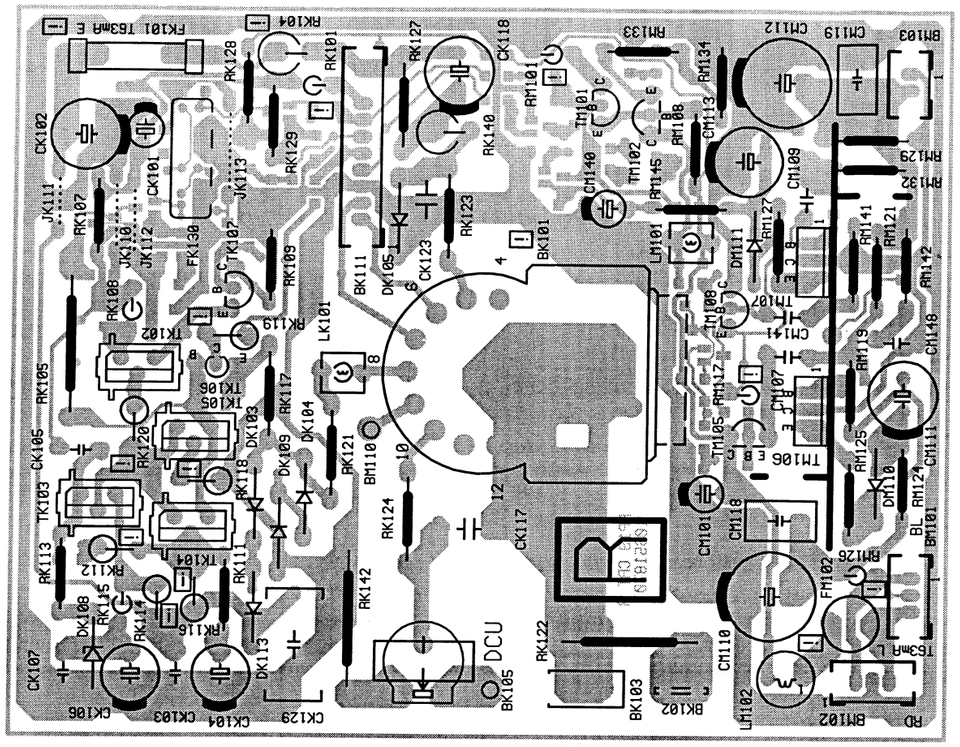

SOLDER SIDE - CÔTE SOUDURES - LÖTSEITE - LATO SALDATURE - LADO SOLDADURAS

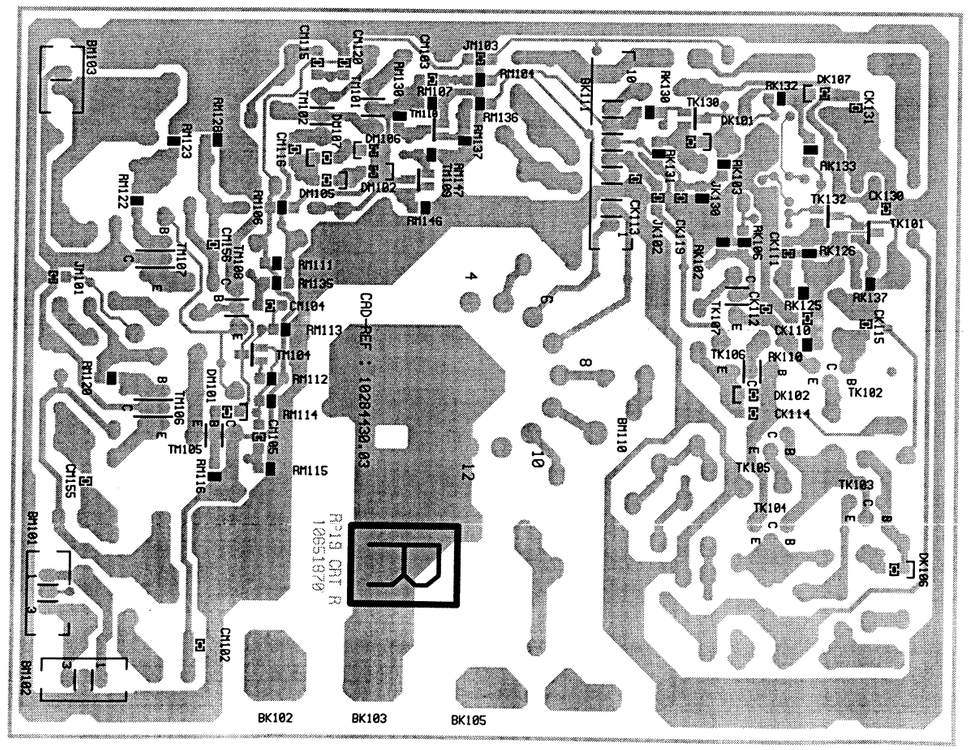




## CRT G - RP19

COMPONENT SIDE - COTE COMPOSANTS - BESTÜCKUNGSSEITE
LATO COMPONENTI - LADO COMPONENTES

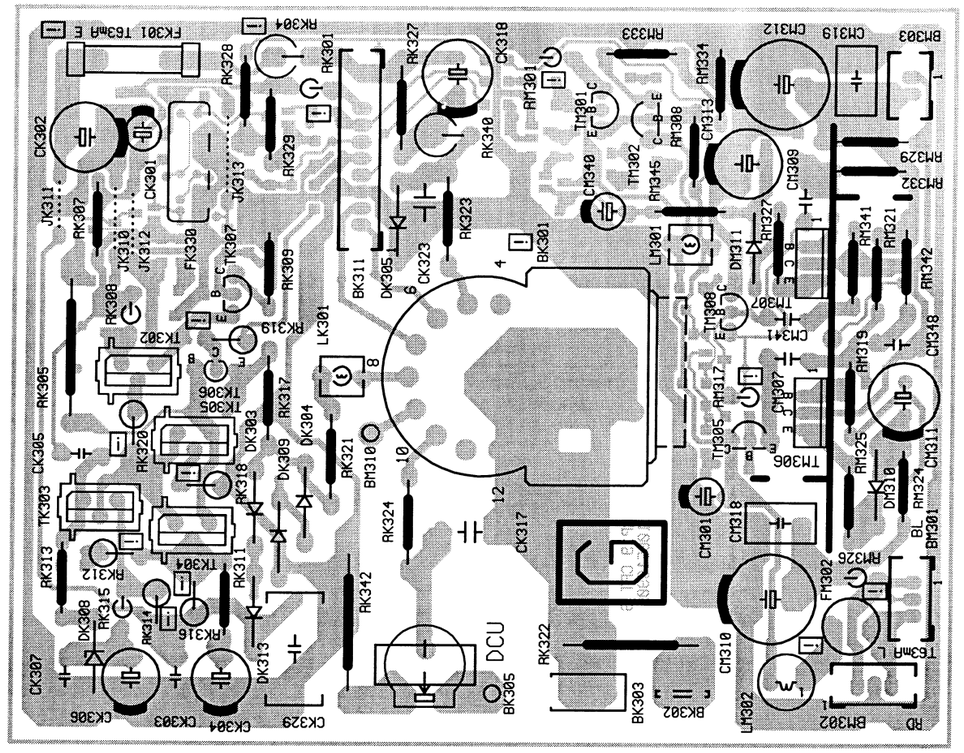

SOLDER SIDE - CÔTE SOUDURES - LÖTSEITE - LATO SALDATURE - LADO SOLDADURAS

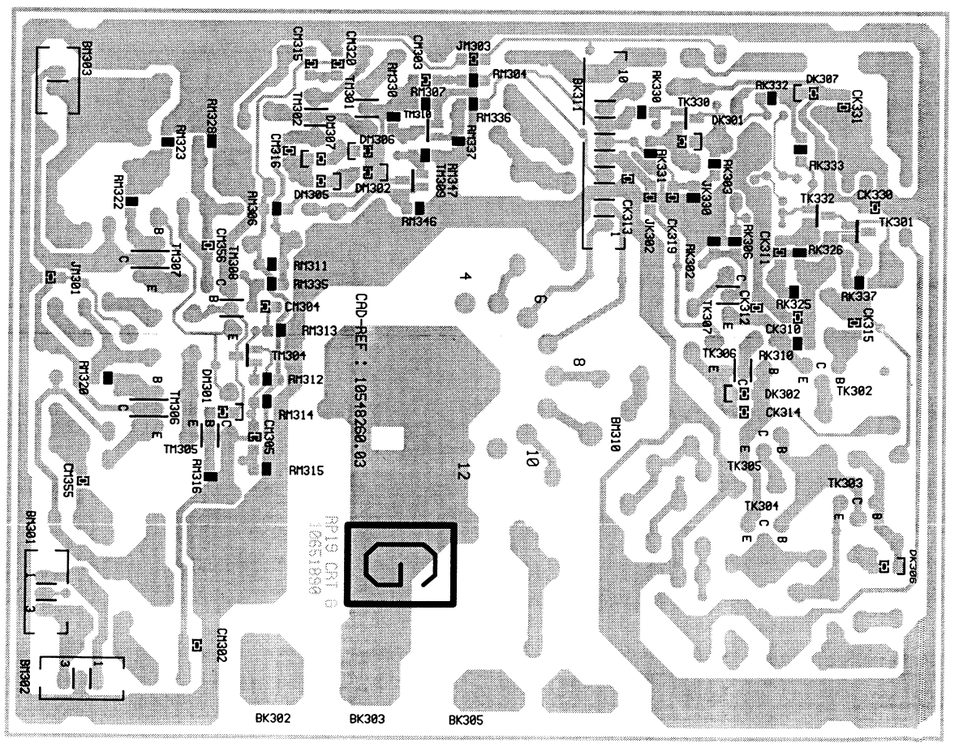

# CRT B - RP19

COMPONENT SIDE - COTE COMPOSANTS - BESTÜCKUNGSSEITE
LATO COMPONENTI - LADO COMPONENTES

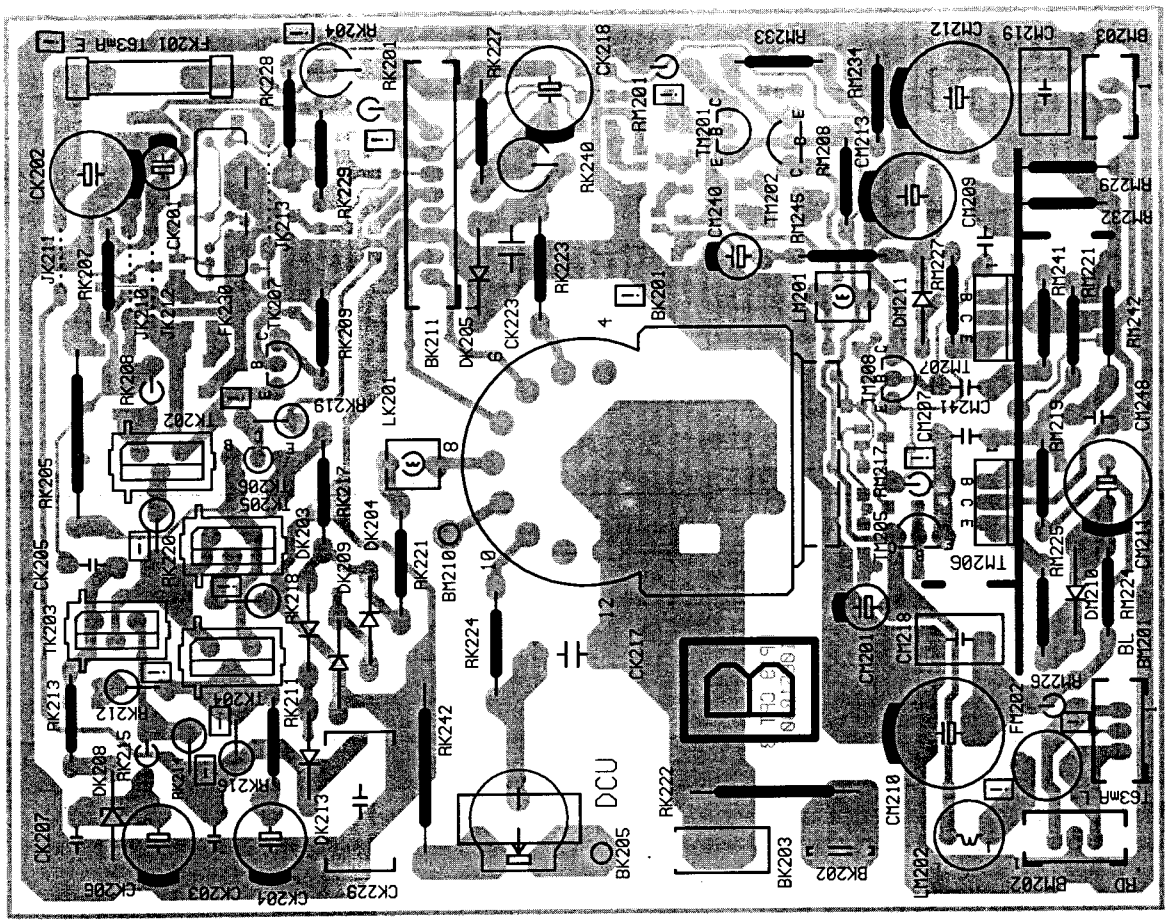

SOLDER SIDE - CÔTE SOUDURES - LÖTSEITE - LATO SALDATURE - LADO SOLDADURAS

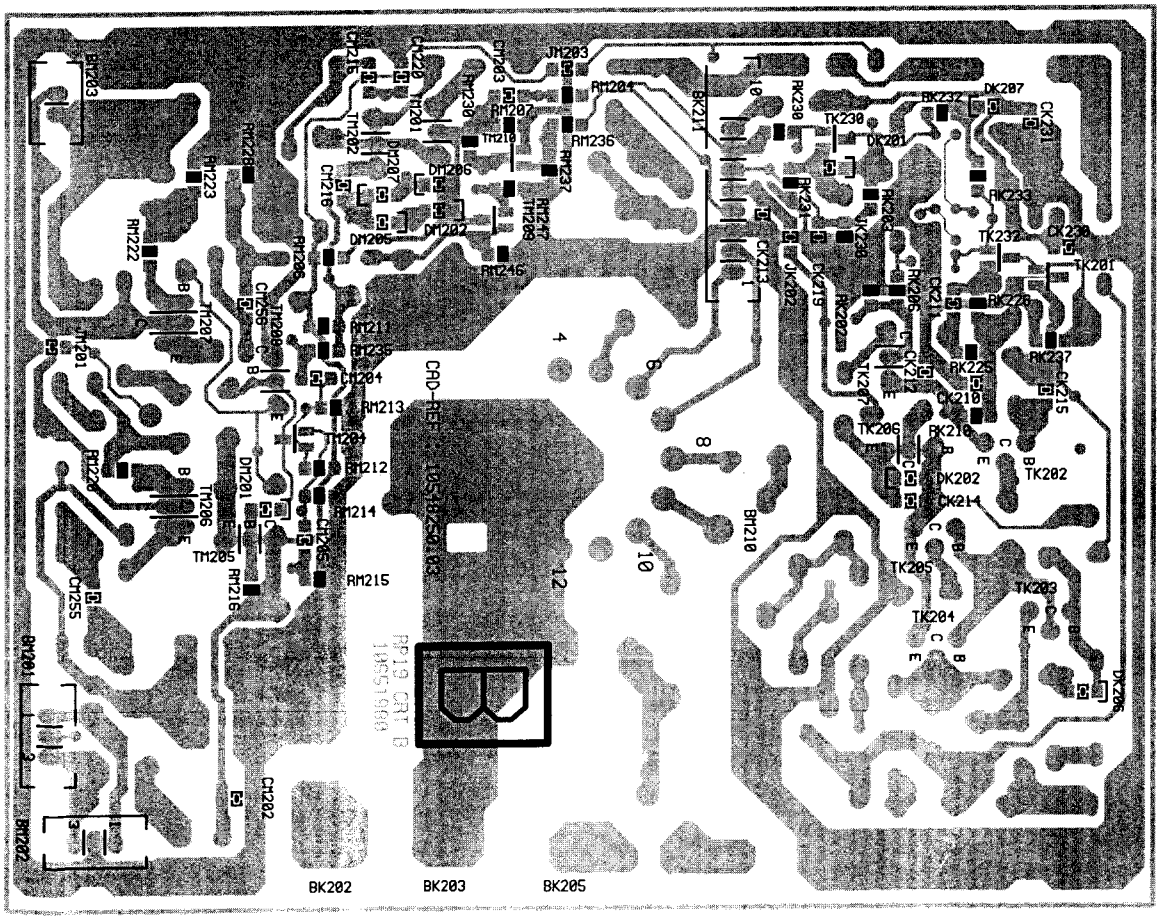

# SUB.RGB-BI RP19.00

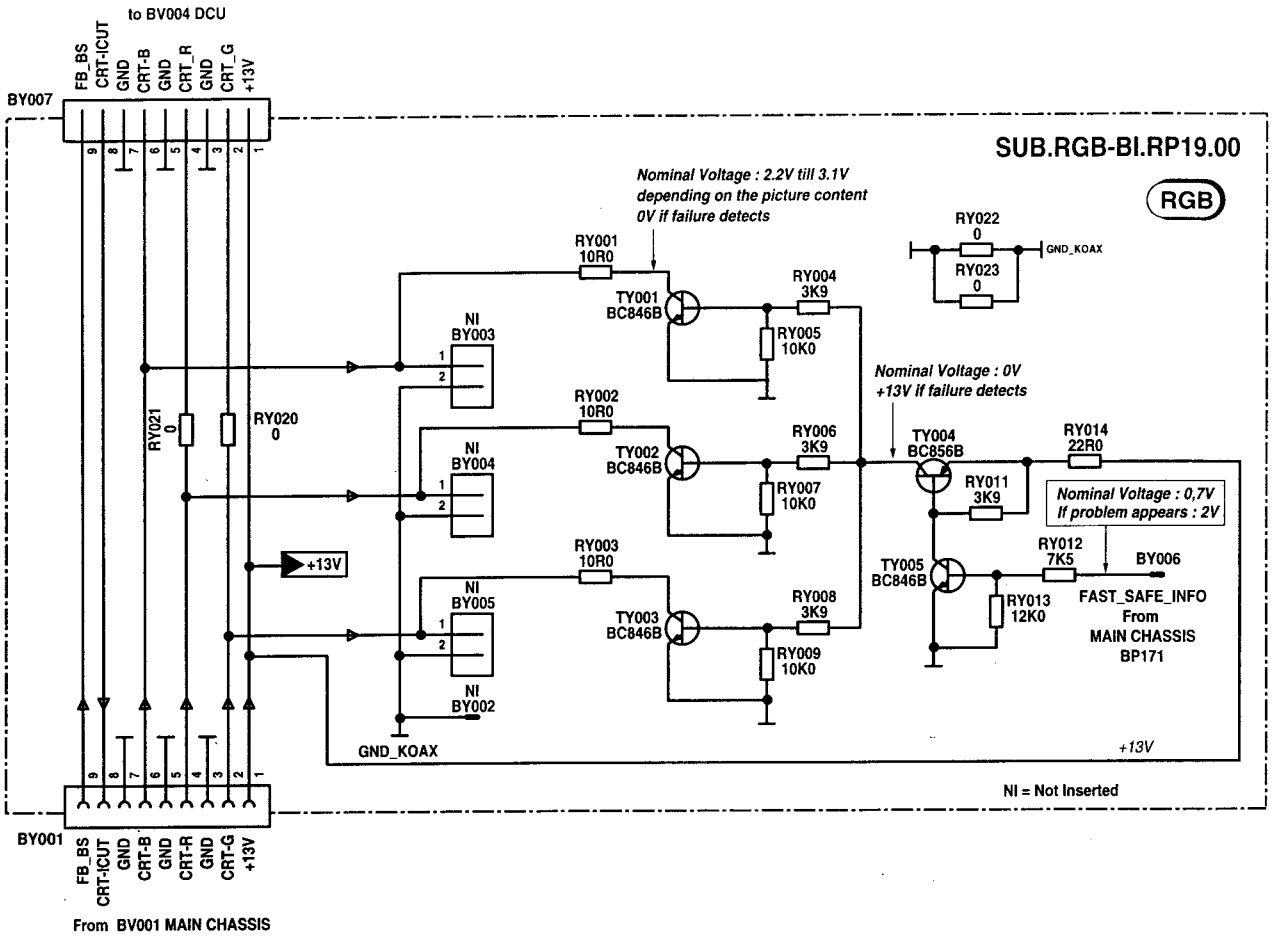


COMPONENT SIDE - COTE COMPOSANTS - BESTÜCKUNGSSEITE
LATO COMPONENTI - LADO COMPONENTES

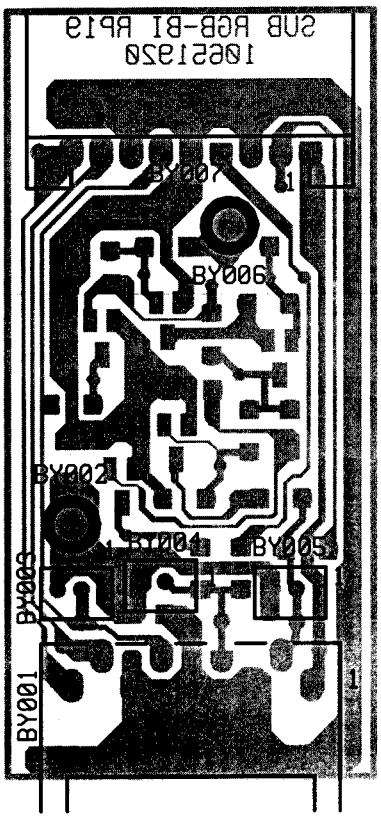


SOLDER SIDE - CÔTE SOUDURES - LÖTSEITE - LATO SALDATURE - LADO SOLDADURAS

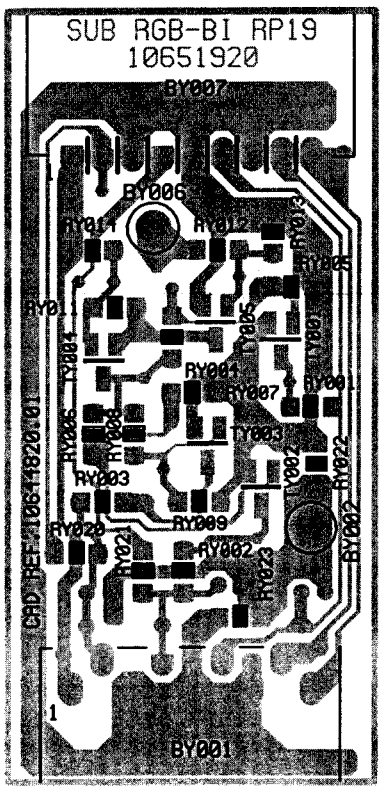

## AVERAGE BEAM LIMITER - LIMITATION DU COURANT DE FAISEAU - STRAHLSTROM BEGRENZUNG - LIMITATORE CORRENTE DI RAGGIO - LIMITADOR DE CORRIENTE DE HAZ

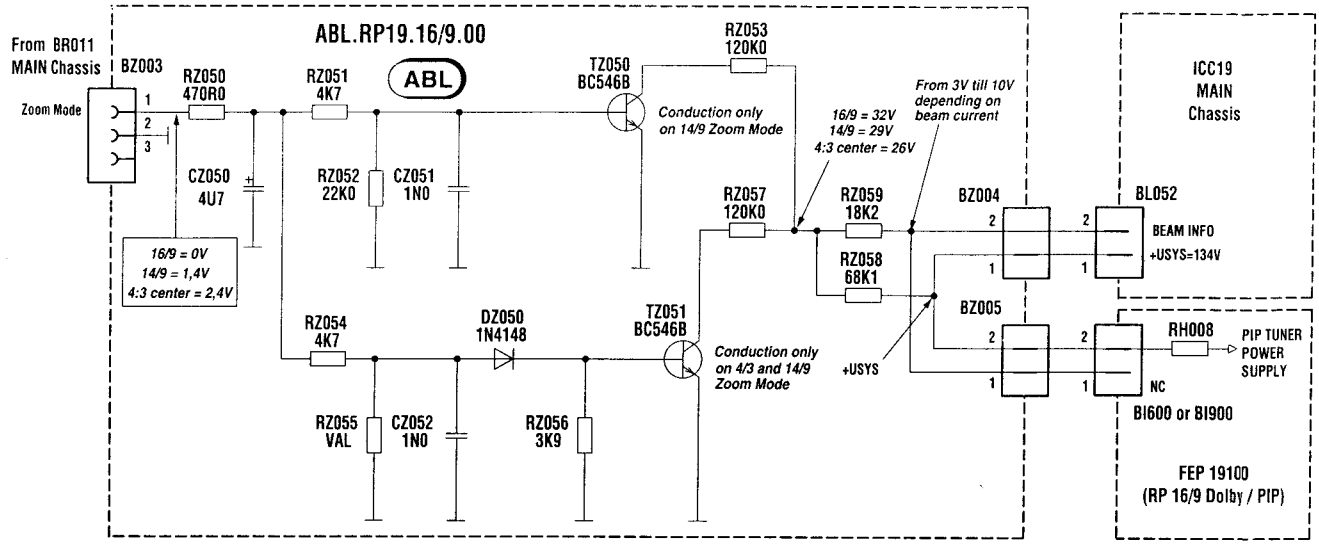


COMPONENT SIDE - COTE COMPOSANTS - BESTÜCKUNGSSEITE
LATO COMPONENTI - LADO COMPONENTES

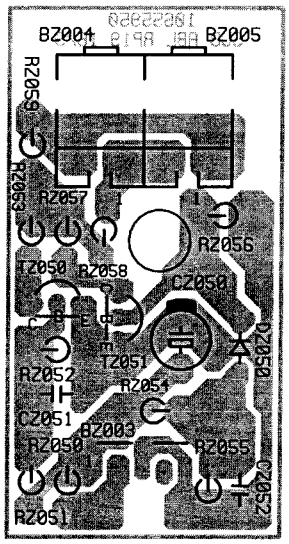


SOLDER SIDE - CÔTE SOUDURES - LÖTSEITE - LATO SALDATURE - LADO SOLDADURAS

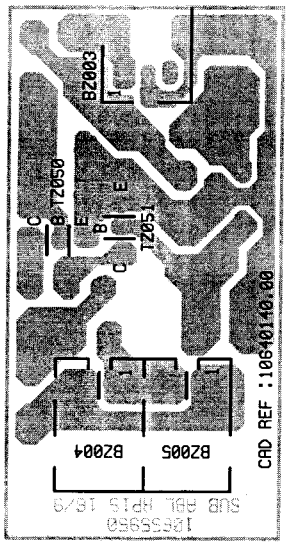


## EXTENSION MEMORY BOARD - PLATINE EXTENSION MEMOIRE - SPEICHERERWEITERUNGSPLATINE - PIASTRA ESTENSIONE MEMORIA - PLACA EXTENSION DE MEMORIA *( Schematic Diagram : Main Board p.31 )*

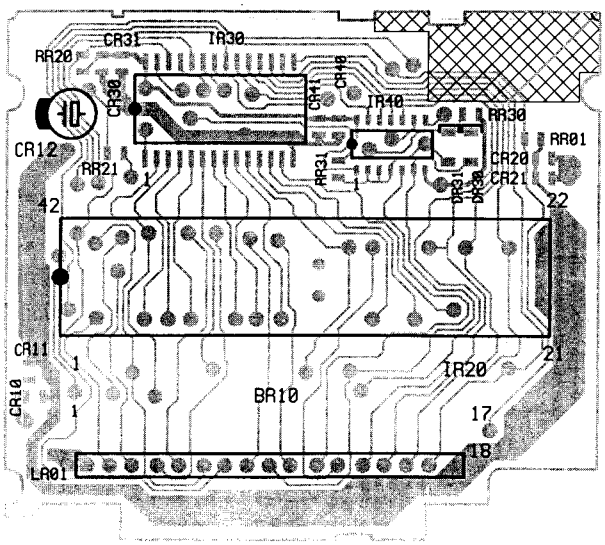


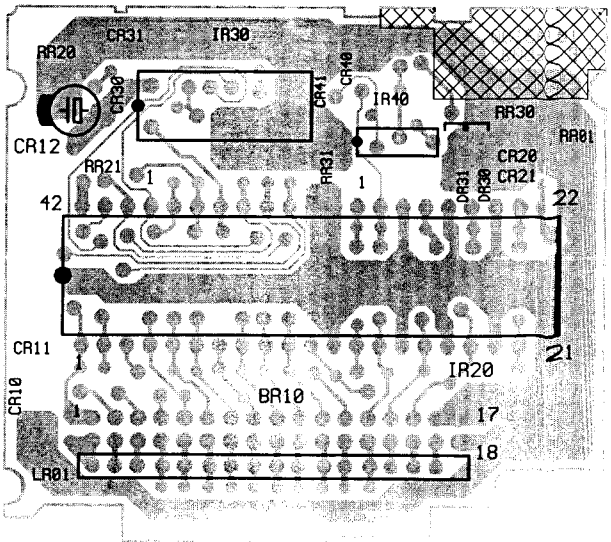

# VM19100

COMPONENT SIDE - COTE COMPOSANTS - BESTÜCKUNGSSEITE
LATO COMPONENTI - LADO COMPONENTES

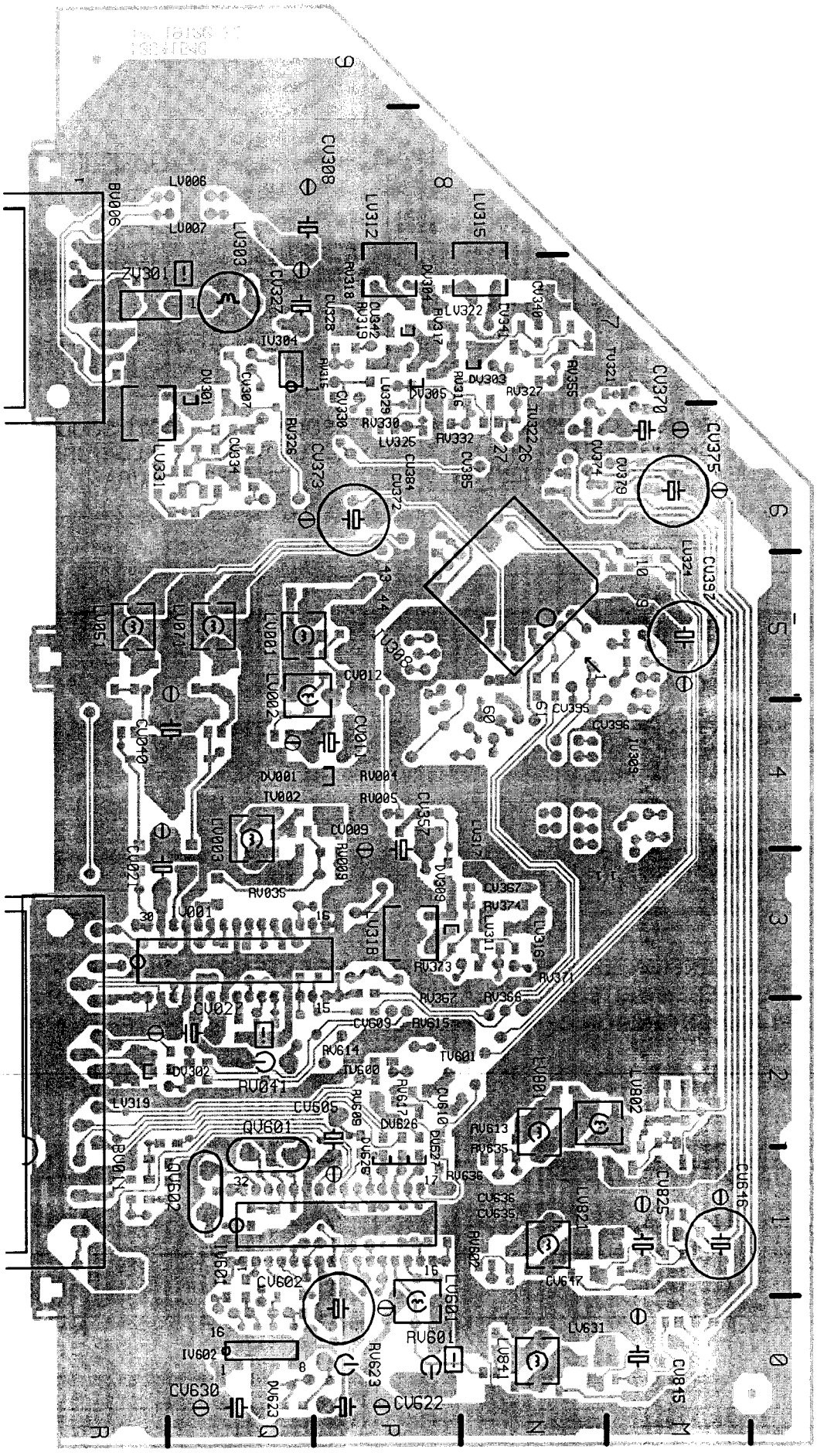

## VM19100

SOLDER SIDE - CÔTE SOUDURES - LÖTSEITE - LATO SALDATURE - LADO SOLDADURAS

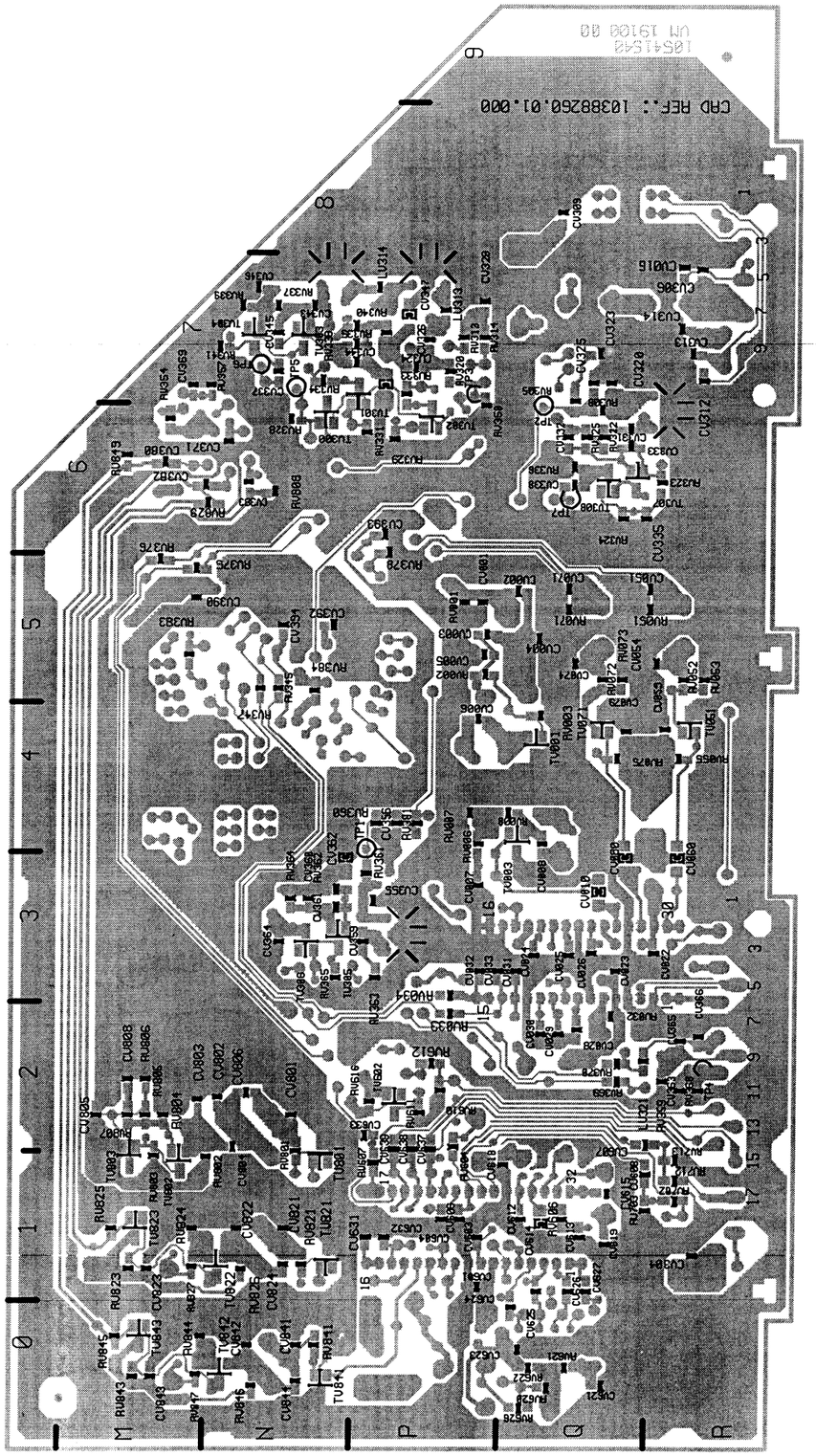

## VIDEO MODULE - MODULE VIDEO - VIDEO BAUSTEIN - MODULO VIDEO - MÓDULO VIDEO
## VM 19100

### VM.19100.00

VM

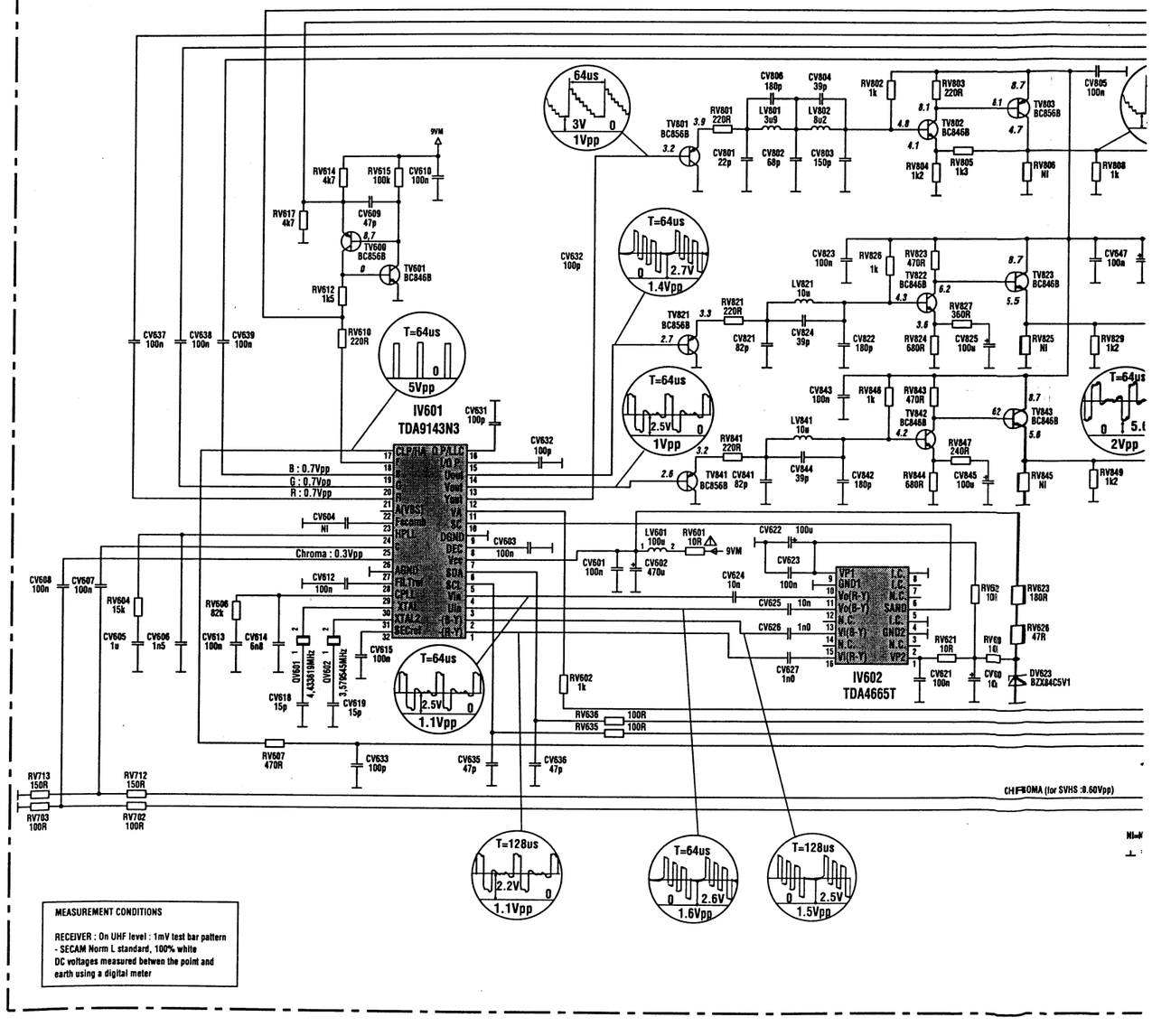

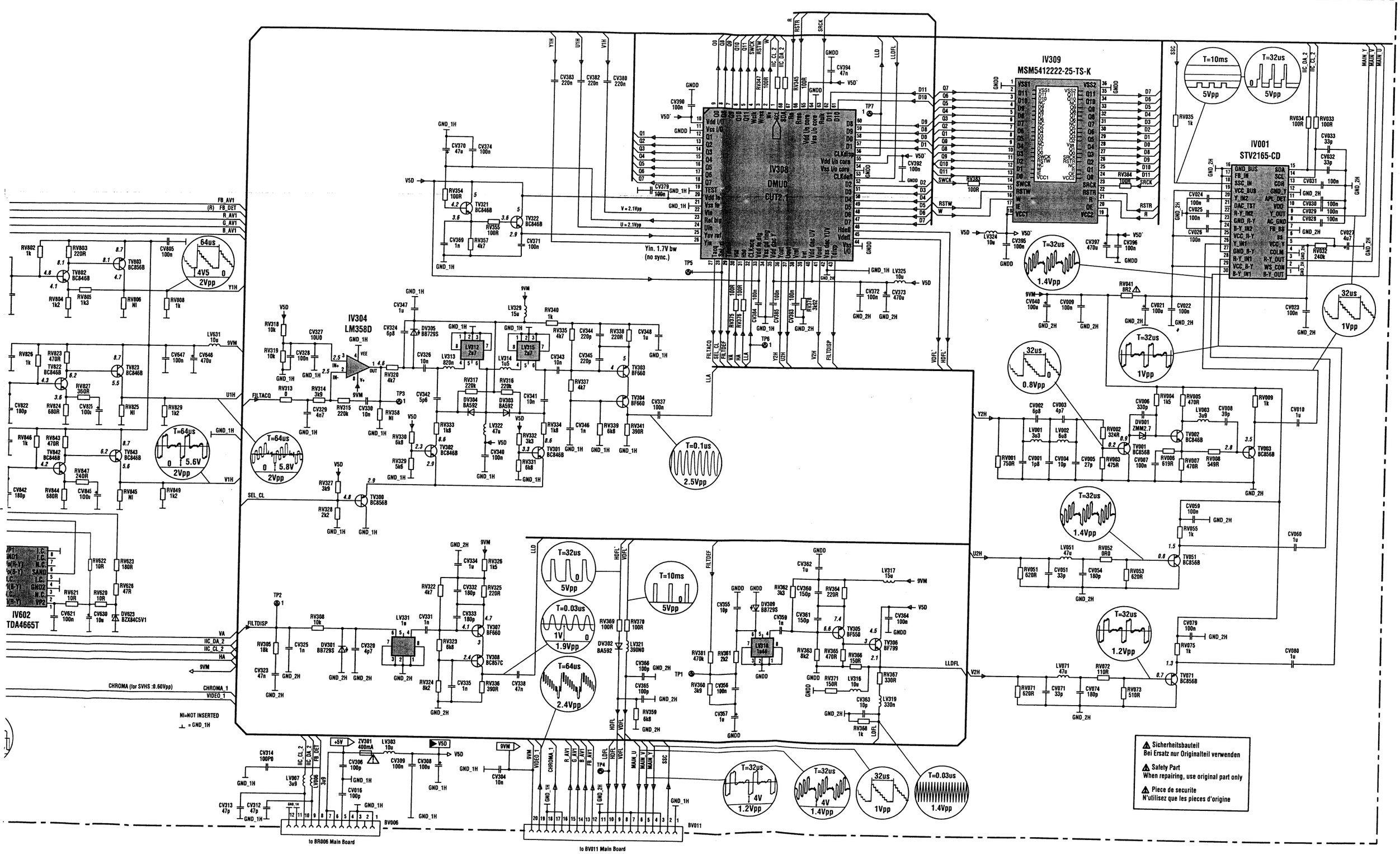
IV309
MSM5412222-25-TS-K
IV308
DMUD
CUT2.1
IV001
STV2165-CD
IV304
LM358D
IV602
TDA4665T
Yin. 1.7V bw
(no sync.)
T=10ms
5Vpp
T=32us
5Vpp
T=32us
1.4Vpp
32us
1Vpp
T=32us
1Vpp
32us
0.8Vpp
T=64us
5.6V
2Vpp
T=64us
5.8V
2Vpp
T=0.1us
2.5Vpp
T=32us
5Vpp
T=10ms
5Vpp
T=0.03us
1V
1.9Vpp
T=64us
2.4Vpp
T=32us
1.4Vpp
T=32us
1.2Vpp
T=32us
4V
1.2Vpp
T=32us
4V
1.4Vpp
32us
1Vpp
T=0.03us
1.4Vpp
64us
4V5
2Vpp
CHROMA (for SVHS :0.60Vpp)
NI=NOT INSERTED
to BR006 Main Board
to BV011 Main Board
Sicherheitsbauteil
Bei Ersatz nur Originalteil verwenden
Safety Part
When repairing, use original part only
Piece de securite
N'utilisez que les pieces d'origine

# VIDEO MODULE - MODULE VIDEO - VIDEO BAUSTEIN - MODULO VIDEO - MÓDULO VIDEO
## VM 19400

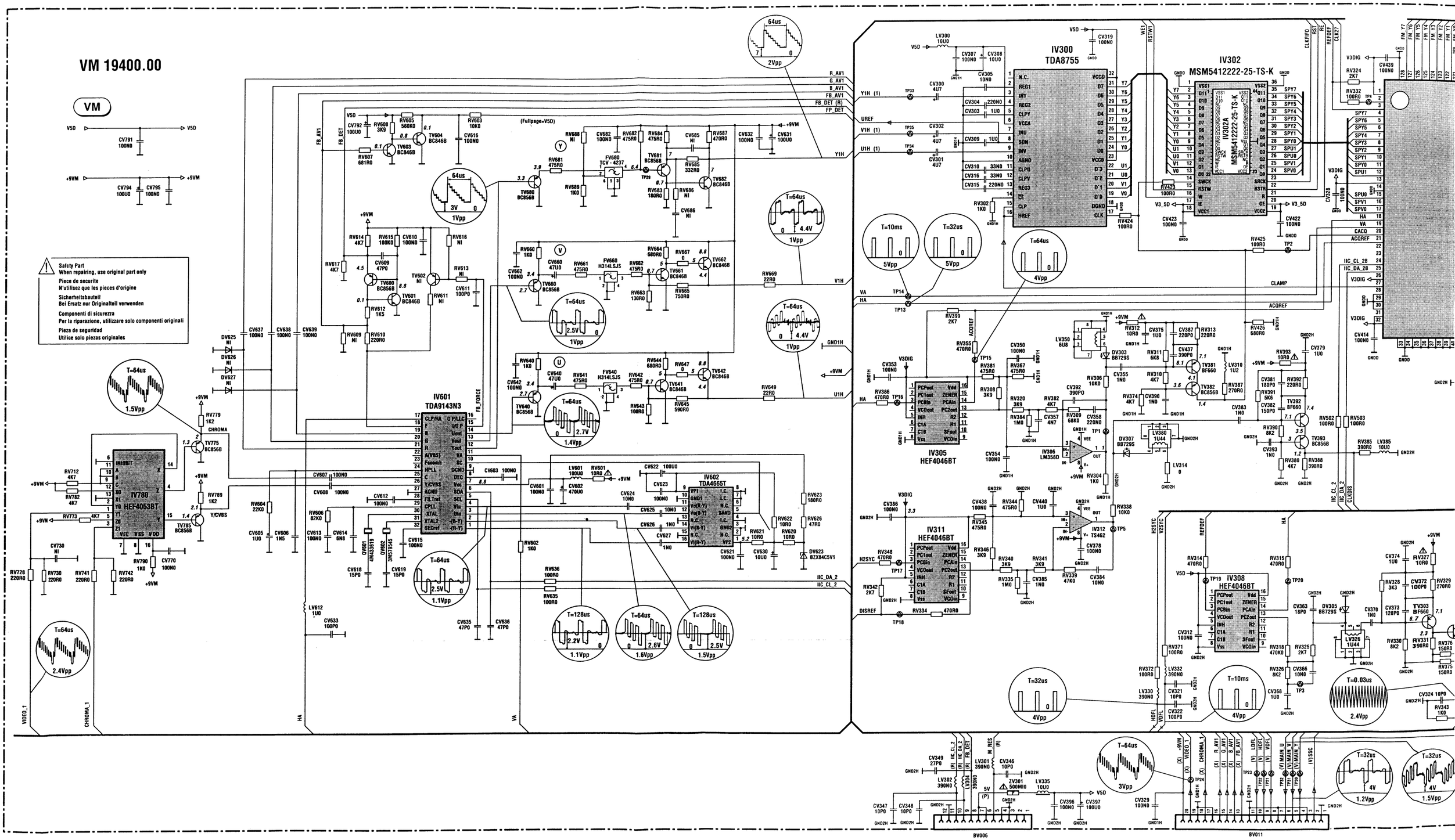

COMPONENT SIDE - COTE COMPOSANTS - BESTÜCKUNGSSEITE
LATO COMPONENTI - LADO COMPONENTES

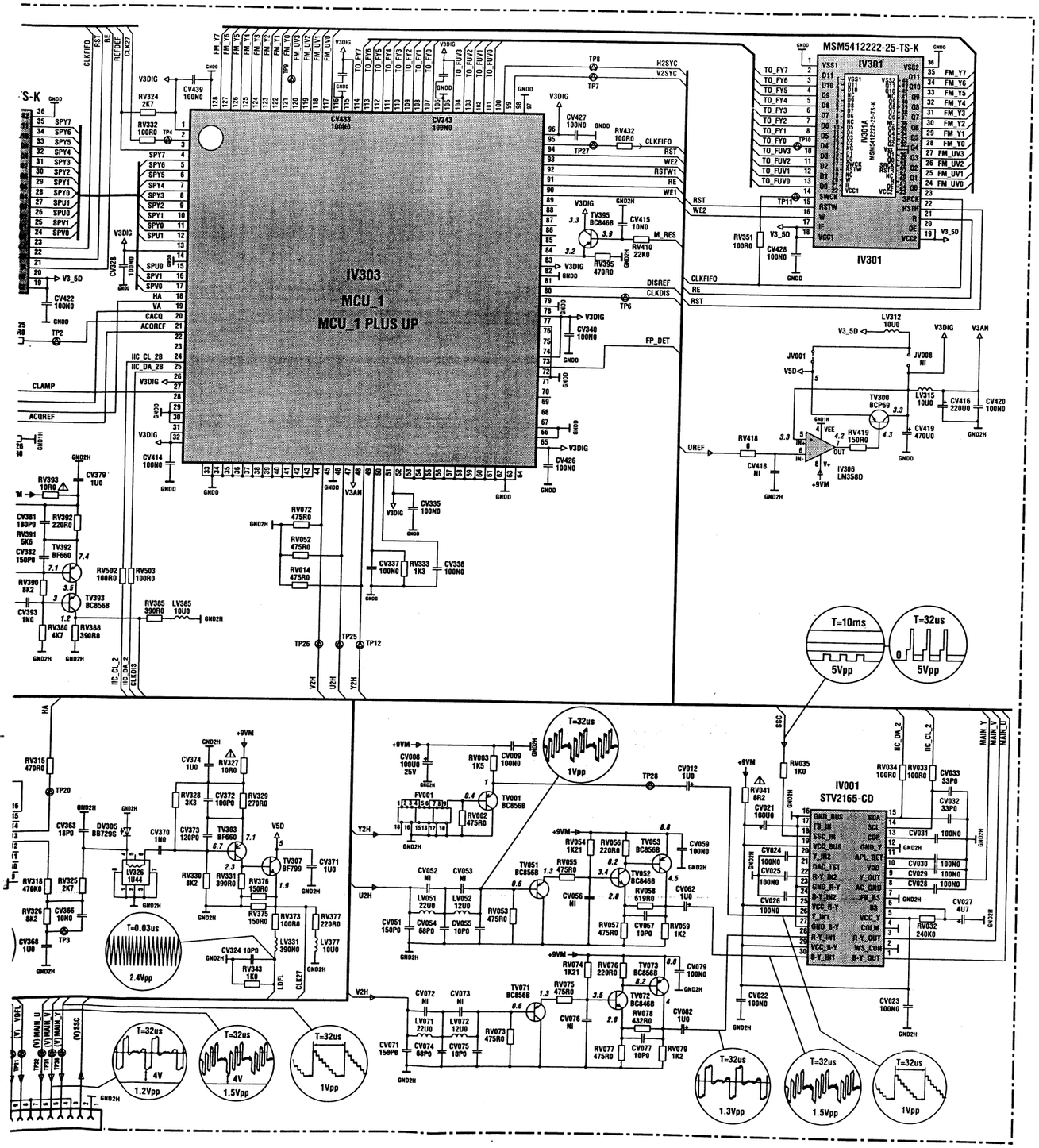


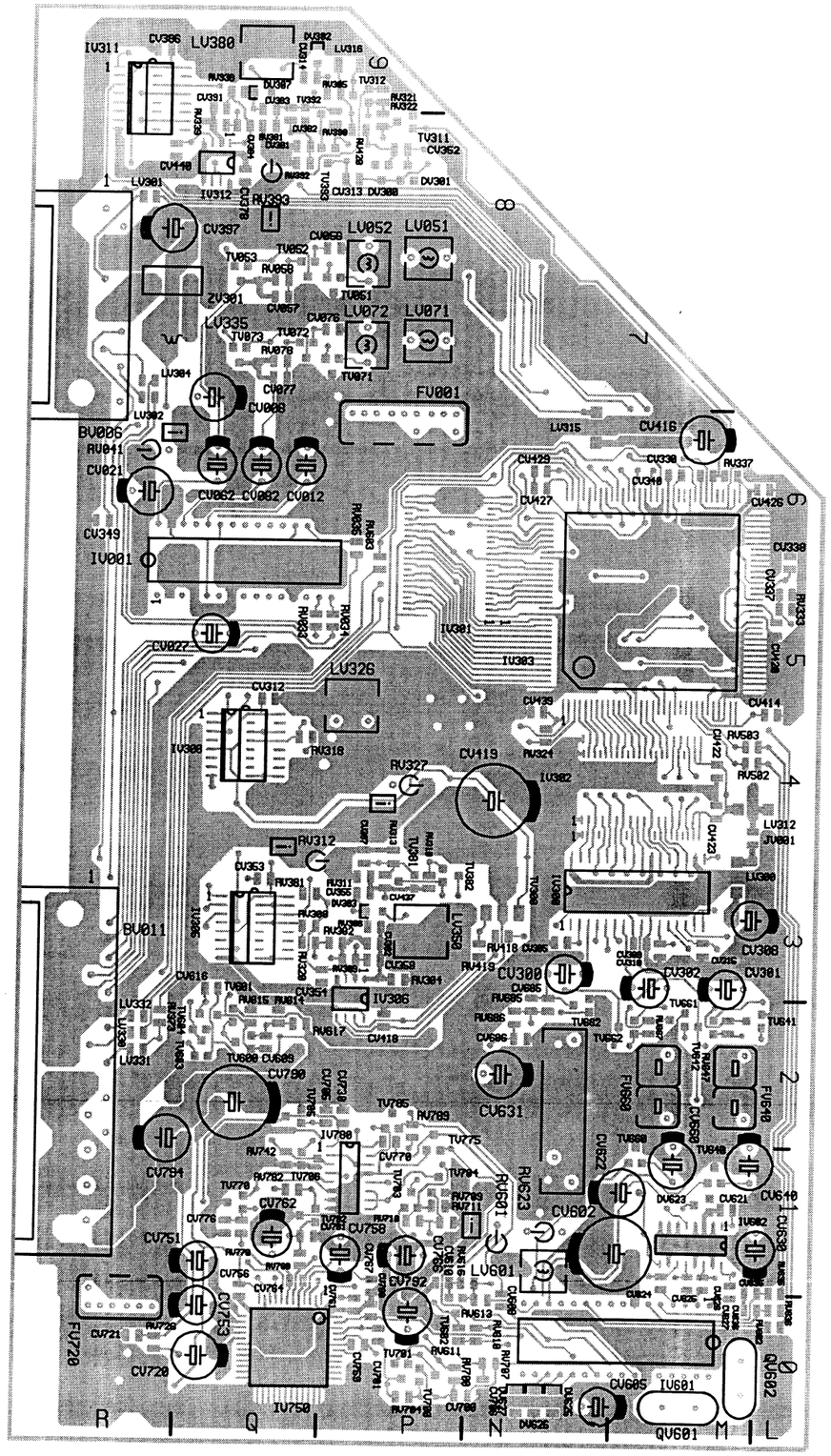

SOLDER SIDE - CÔTE SOUDURES - LÖTSEITE - LATO SALDATURE - LADO SOLDADURAS

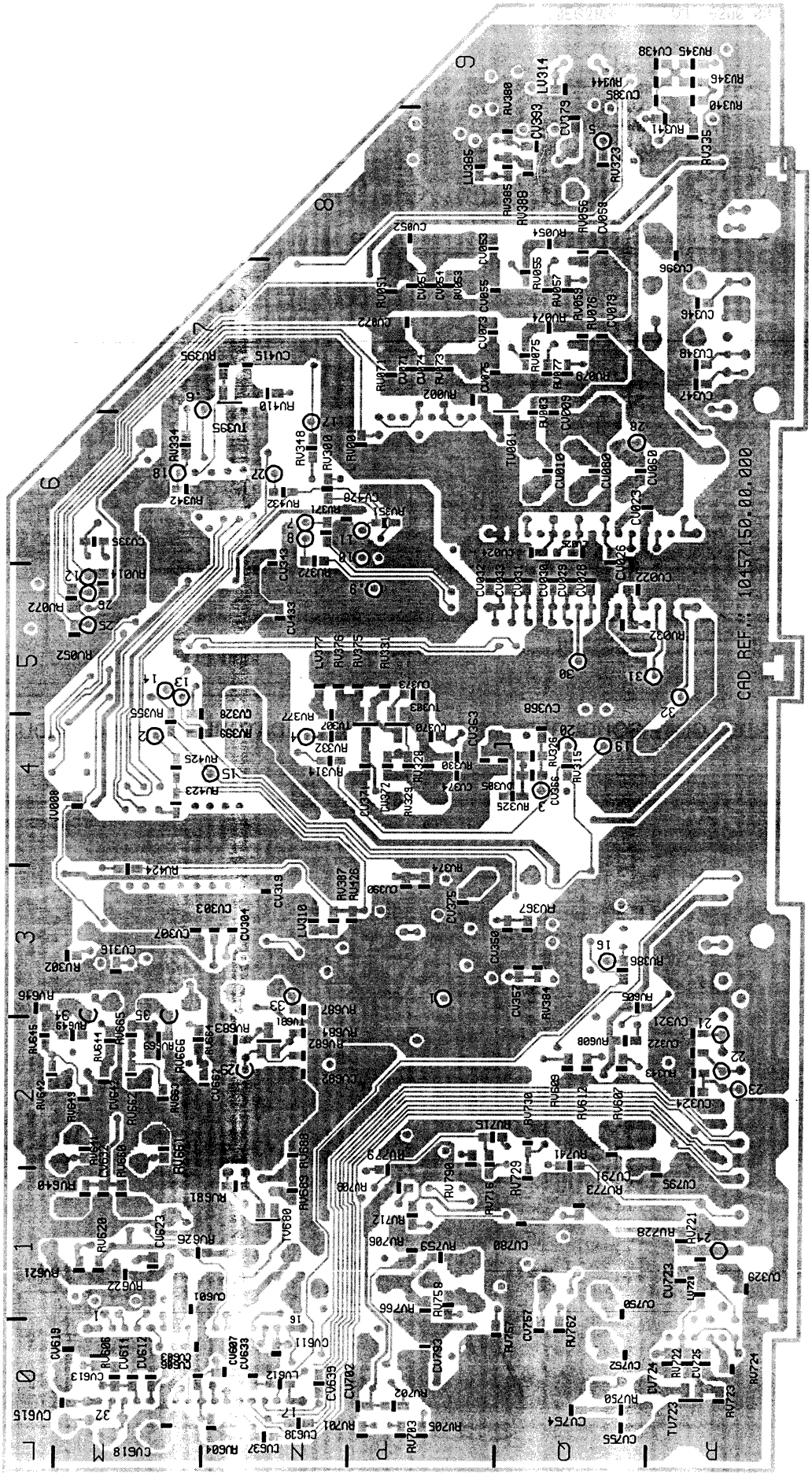


**RP C19**

COMPONENT SIDE - COTE COMPOSANTS - BESTÜCKUNGSSEITE
LATO COMPONENTI - LADO COMPONENTES

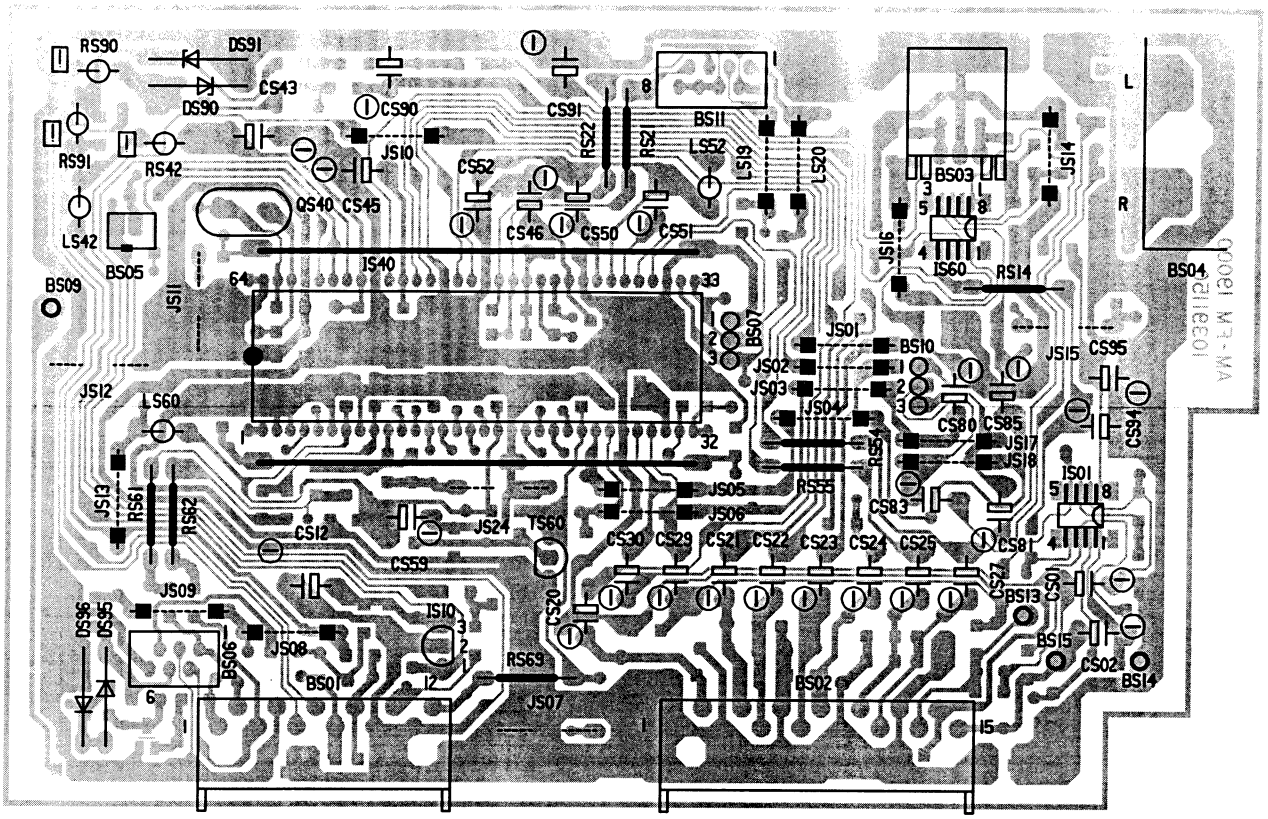

SOLDER SIDE - CÔTE SOUDURES - LÖTSEITE - LATO SALDATURE - LADO SOLDADURAS

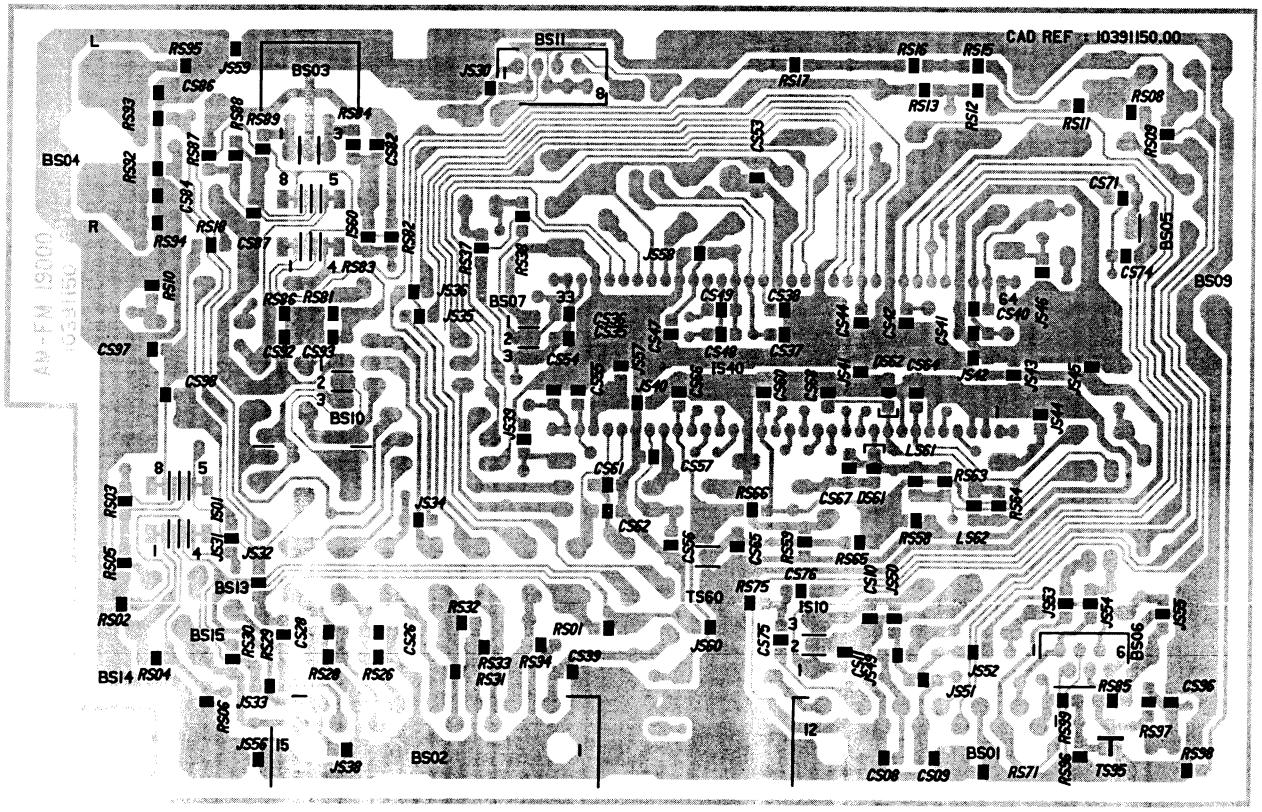

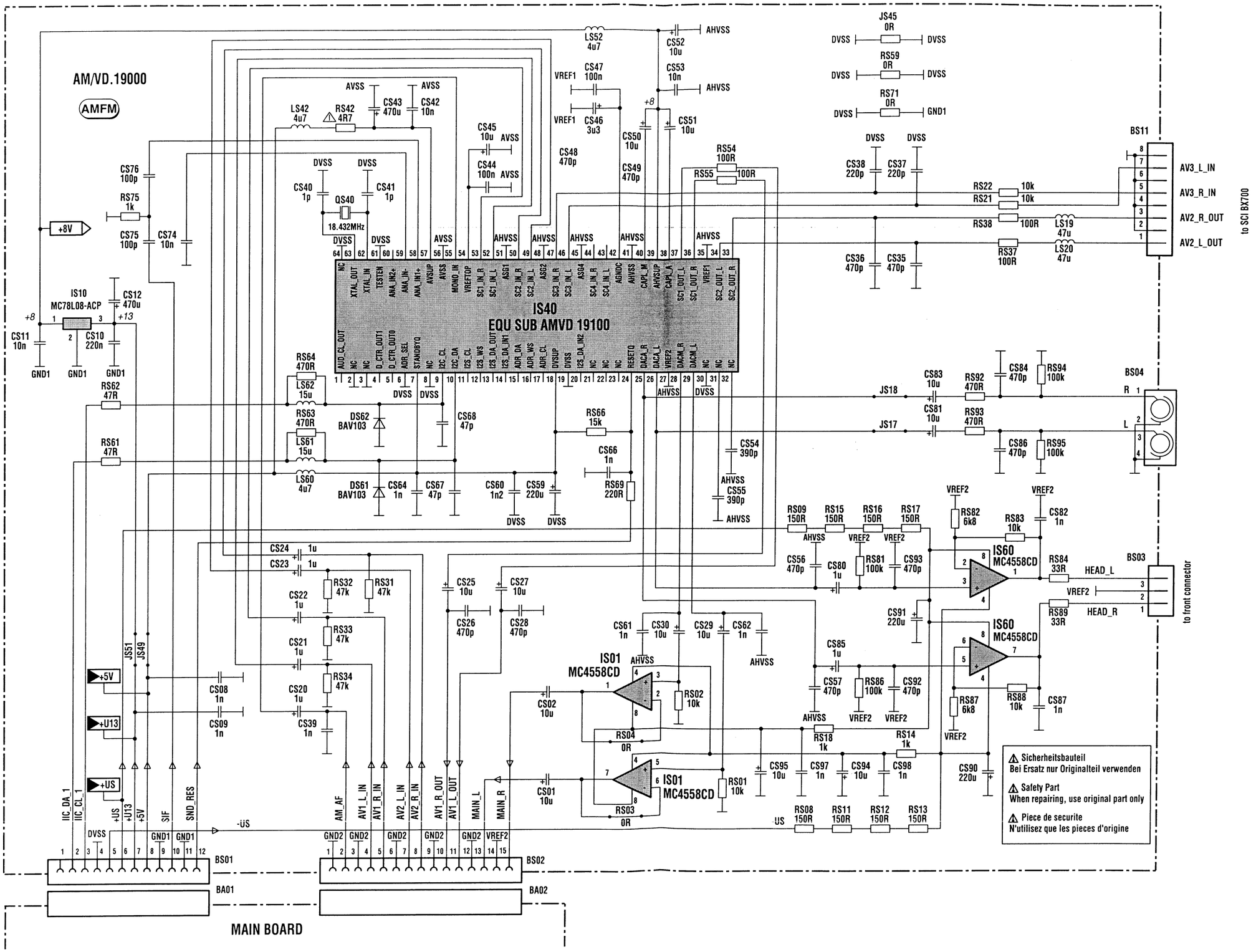
AM/VD.19000
AMFM
IS40
EQU SUB AMVD 19100
IS10
MC78L08-ACP
IS01
MC4558CD
IS60
MC4558CD
QS40
18.432MHz
DS62
BAV103
DS61
BAV103
+8V
+5V
+U13
+US
-US
AHVSS
DVSS
AVSS
VREF1
VREF2
GND1
GND2
BS11
BS04
BS03
BS01
BS02
BA01
BA02
AV3_L_IN
AV3_R_IN
AV2_R_OUT
AV2_L_OUT
to SCI BX700
HEAD_L
HEAD_R
to front connector
MAIN BOARD
Sicherheitsbauteil
Bei Ersatz nur Originalteil verwenden
Safety Part
When repairing, use original part only
Piece de securite
N'utilisez que les pieces d'origine

to SCI BX700

# SUB AUDIO MODULE VIRTUAL DOLBY

SUB AMVD

SUB AMVD 19100 00

PINS of IC 64 ... 33

BS002

DGND 1 2 3 4 5 6 7 8 9 10 11 12 13 14 15 16 17 18 19 20 21 22 23 24 25 26 27 28 29 30 31 32

XTALIN XTALOUT ANAIN2+ ANAIN- ANAIN1+ +5VA MONOIN VREFTOP SC1INR SC1INL SC2INR SC2INL SC3INR SC3INL AGND SC4INR SC4INL AGNDC CAPLM +8V CAPLA SC1OUTL SC1OUTR SC2OUTL SC2OUTR

AGND

DGND

CS102 10N0

CS101 220N0

+8V

## IS100 MSP3410D(DIE)

45 AHVSS 44 AGNDC 43 SC4INL 42 SC4INR 41 ASG3 40 SC3INL 39 SC3INR 38 ASG1 37 SC2INL 36 SC2INR 35 ASG0 34 SC1INL 33 SC1INR 32 VREFTOP 31 VREFTOP 30 MONOIN 29 AVSS 28 AVSS

46 AHVSS
47 CAPLM
48 AHVSUP
49 AVHSUP
50 CAPLA
51 SC1OUTL
52 SC1OUTR
53 VREF1
54 VREF1
55 SC2OUTL
56 SC2OUTR
57 ASG3
58 TESTNEU
59 DACMSUB
60 DACML
61 DACMR
62 VREF2
63 VREF2

27 AVSUP
26 AVSUP
25 ANAIN1+
24 ANAIN-
23 ANAIN2+
22 TESTEN
21 XTALIN
20 XTALOUT
19 DMACSYNC
18 AUDCLOUT
17 NP
16 NP
15 NP
14 DCTROUT1
13 DCTROUT0
12 ADRSEL
11 STANDBYQ
10 NP

65 DACAL 66 DACAR 67 RESETQ 68 I2SDAIN2 69 DVSS 70 DVSS 71 DVSUP 72 DVSUP 1 ADRCL 2 ADRWS 3 NP 4 ADRDA 5 I2SDAIN1 6 I2SDAOU1 7 I2SWS 8 I2SCL 9 I2CDA I2CCL

AGND

CS106 1N0

+5VD

CS103 1N0

CS104 10N0

CS105 100N0

DGND +5VD

PINS of IC

ADRSEL I2CCL I2CDA +5VD DGND RESETQ DACAR DACAL DACMR DACML

1 2 3 4 5 6 7 8 9 10 11 12 13 14 15 16 17 18 19 20 21 22 23 24 25 26 27 28 29 30 31 32

1 BS001 32

DGND

CS206 10U0

CS207 100N0

TP2 TP1

DGND

CS202 10N0

## IS200 DPL3518(DIE)

43 AHVSS 42 AHVSS 41 AGNDC 40 SC3INL 39 SC3INR 38 ASG2 37 SC2INL 36 SC2INR 35 ASG1 34 SC1INL 33 SC1INR 32 VREFTOP 31 VREFTOP 30 MONOIN 29 AVSS 28 AVSS 27 AVSUP

44 CAPLC1
45 AHVSUP
46 AHVSUP
47 CAPLC2
48 SC1OUTL
49 SC1OUTR
50 VREF1
51 VREF1
52 SC2OUTL
53 SC2OUTR
54 ASG3
55 DACC1L
56 DACC1R
57 VREF2
58 VREF2
59 DACC2L
60 DACC2R

26 AVSUP
25 NC
24 NC
23 NC
22 TESTEN
21 XTALIN
20 XTALOUT
19 DCTRIN
18 AUDCLOUT
17 NP
16 NP
15 NP
14 DCTRIO1
13 DCTRIO0
12 ADRSEL
11 STANDBYQ
10 NP

+5VA

AGND

+5VD

61 RESETQ 62 I2SDAOU2 63 I2SDAIN2 64 DVSS 65 DVSS 66 DVSUP 67 DVSUP 68 NP 1 NC 2 NC 3 NC 4 I2SDAIN1 5 I2SDAOU1 6 I2SWS 7 I2SCL 8 I2CDA 9 I2CCL

CS203 1N0

CS204 10N0

CS205 100N0

DGND +5VD

# DIGITAL CONVERGENCE UNIT - PLATINE DE CONVERGENCES NUMERIQUES - DIGITALE KONVERGENZ EINHEIT - UNITÀ DI CONVERGENZA DIGITALE - UNIDAD DE CONVERGENCIA DIGITAL

DCU.RP19.00

DCU

CONVERGENCE GENERATOR

SCHIELDING

IK01 STV2040

IK02 TL084/CP

IK03 TL084/CP

IP02 TL084/CP

IK04 MC7812/CT

IK05 MC7805/CT

IK06 L7912CV

IK07 M24C32BN1

IK08 X24164

IK15 X24164

FILTER AND OUTPUT AMPLIFIER

PIN AND KEY PRE-CORRECTION

GRID PATTERN INSERTING

SUPPLY WATCH DOG

TO CONVERGENCE POWER AMPLIFIER

IA10 TL082CD

IG11 TL082CD

RV

GV

RH

GH

CONVERGENCE

ICC19 CHASSIS MAIN BOARD

POWER AMPLIFIER

TXT MODULE

Note : The form of signals D R/G/B, RV,RH,GH,GV,BH and BV is given for information only. They may vary with the convergence settings and the synchronisation of the oscilloscope.

Note : La forme des signaux D R/G/B, RV,RH,GH,GV,BH et BV est donnée à titre indicatif. Elle peut varier avec les réglages de convergence et la synchronisation de l'oscilloscope.

Hinweis : Die Form der Signale D R/G/B, RV, RH, GH, BH und BV ist nur informativ. Sie können je nach Einstellung der Konvergenz und der Synchronisation des Oszilloskops abweichen.

Nota : La forma dei segnali D R/G/B, RV, RH, GH, GV, BH e BV viene fornita solo a titolo indicativo. La forma può variare in base alle regolazioni di convergenza e alla sincronizzazione dell'oscilloscopio.

Nota : La forma de las señales D R/G/B, RV, RH, GH, GV, BH Y BV se facilita únicamente para información. Puede diferir con los parámetros de convergencia y la sincronización del osciloscopio.

DCU.RP19.00

DCU

GV

CONVERGENCE POWER AMPLIFIER

BV

DEFLECTION SPLITTER

S&H PULSE FORMER

CONTRAST REDUCING BEAM - SPOT - LIMITER

GH

BH

# DIGITAL CONVERGENCE UNIT - PLATINE DE CONVERGENCES NUMERIQUES - DIGITALE KONVERGENZ EINHEIT - UNITÀ DI CONVERGENZA DIGITALE - UNIDAD DE CONVERGENCIA DIGITAL

COMPONENT SIDE - COTE COMPOSANTS - BESTÜCKUNGSSEITE - LATO COMPONENTI - LADO COMPONENTES

SOLDER SIDE

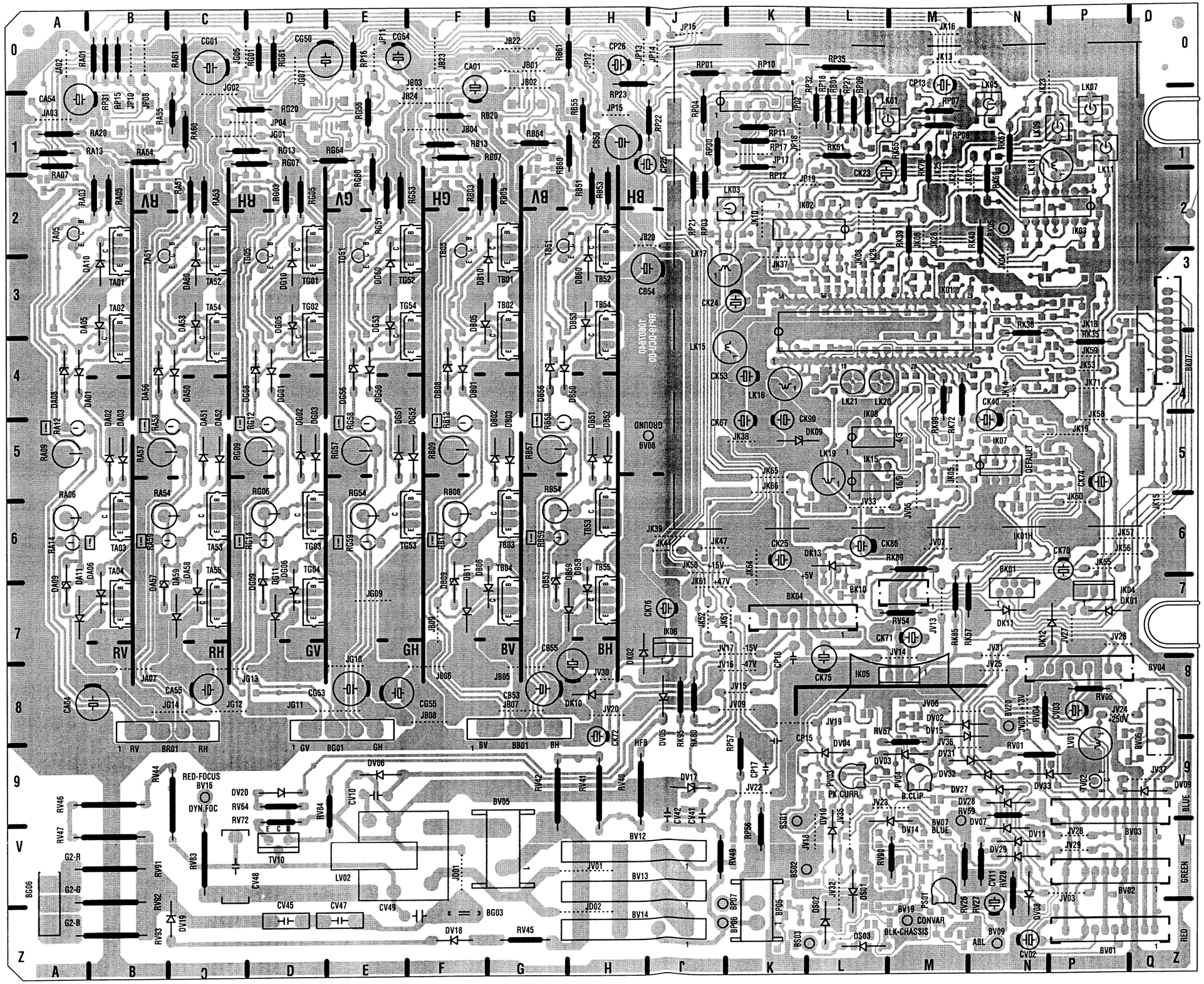


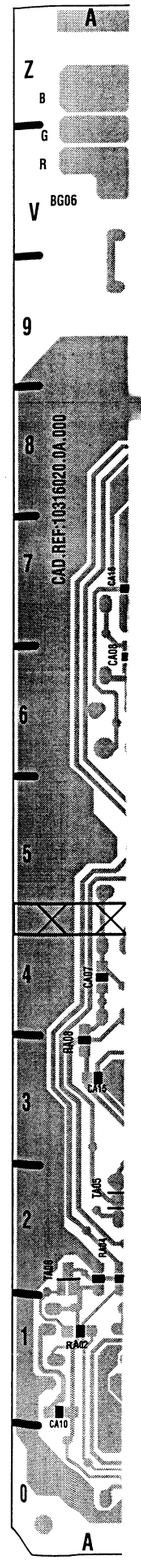

SOLDER SIDE - CÔTE SOUDURES - LÖTSEITE - LATO SALDATURE - LADO SOLDADURAS

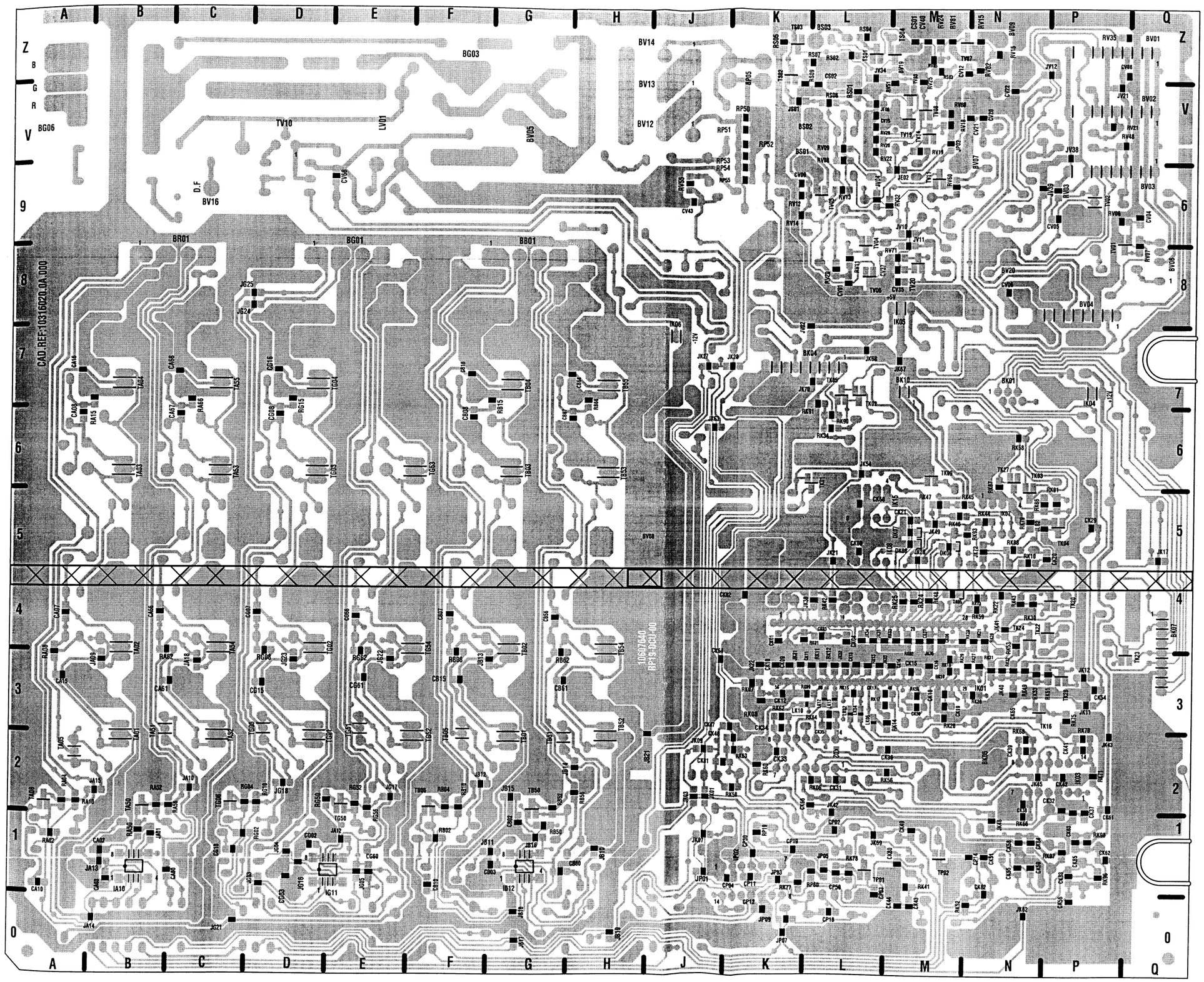

# PICTURE IN PICTURE - MODULE IMAGE DANS L'IMAGE - BILD IM BILD BAUSTEIN - MODULO IMMAGINE NELL' IMMAGINE - MODULO IMAGEN EN IMAGEN

DTP.19510

PIP

TDA 8601 LOGIC

| PINS(I/O) | O/P |
|---|---|
| HIGH | TEXT/OSD |
| LOW | PIP |

⚠ Sicherheitsbauteil
Bei Ersatz nur Originalteil verwenden

⚠ Piece de securite
N'utilisez que les pieces d'origine

⚠ Safety Part
When repairing, use original part only



COMPONENT SIDE - COTE COMPOSANT
LATO COMPONENTI - LADO C

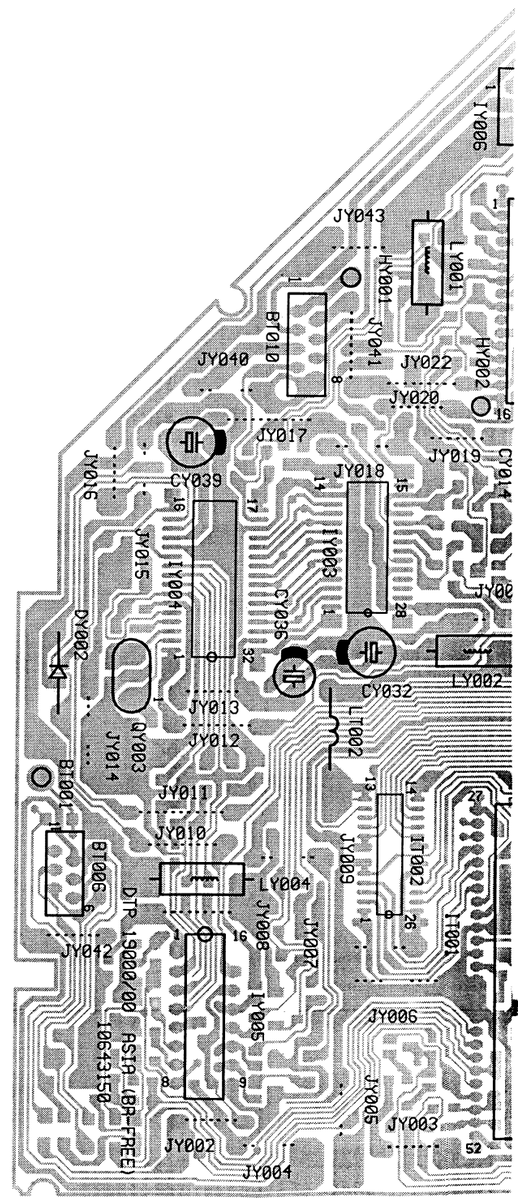

ENT SIDE - COTE COMPOSANTS - BESTÜCKUNGSSEITE
LATO COMPONENTI - LADO COMPONENTES

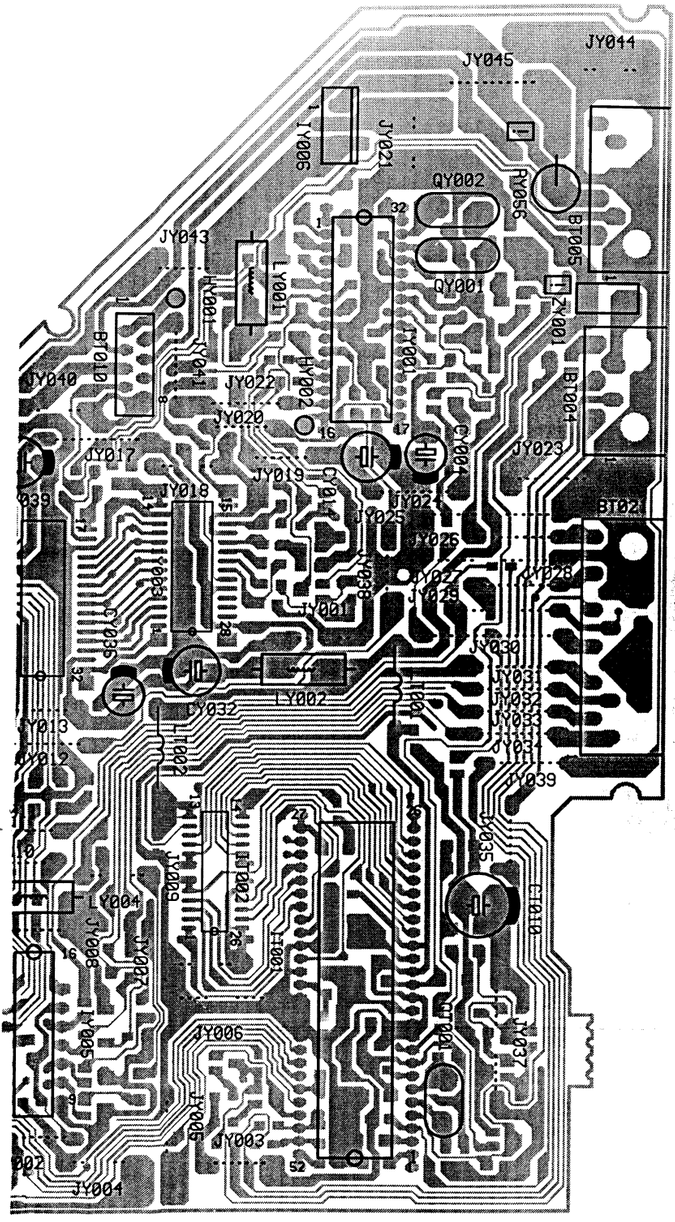

SOLDER SIDE - CÔTE SOUDURES - LÖTSEITE - LATO SALDATURE - LADO SOLDADURAS

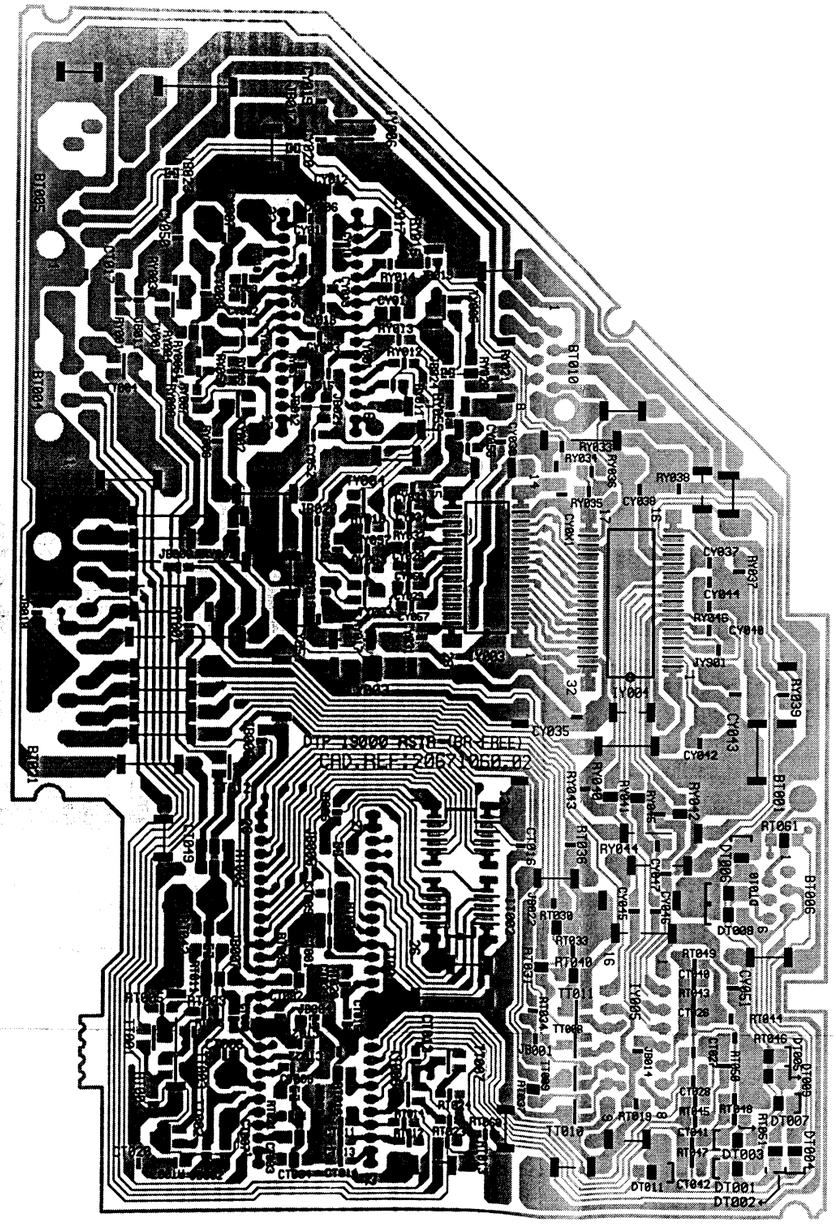

COMPONENT SIDE - COTE COMPOSANTS - BESTÜCKUNGSSEITE
LATO COMPONENTI - LADO COMPONENTES

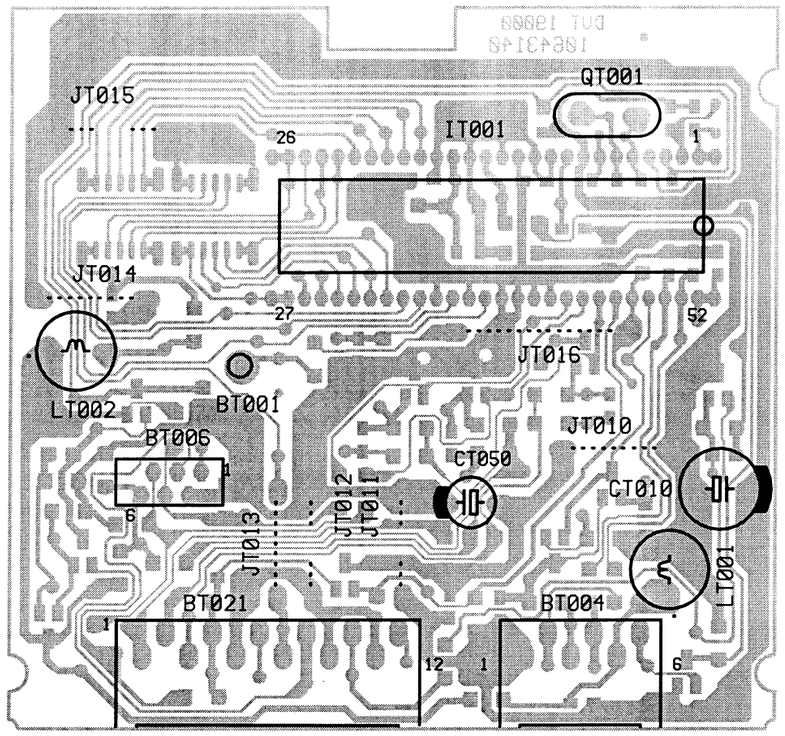

SOLDER SIDE - CÔTE SOUDURES - LÖTSEITE - LATO SALDATURE - LADO SOLDADURAS

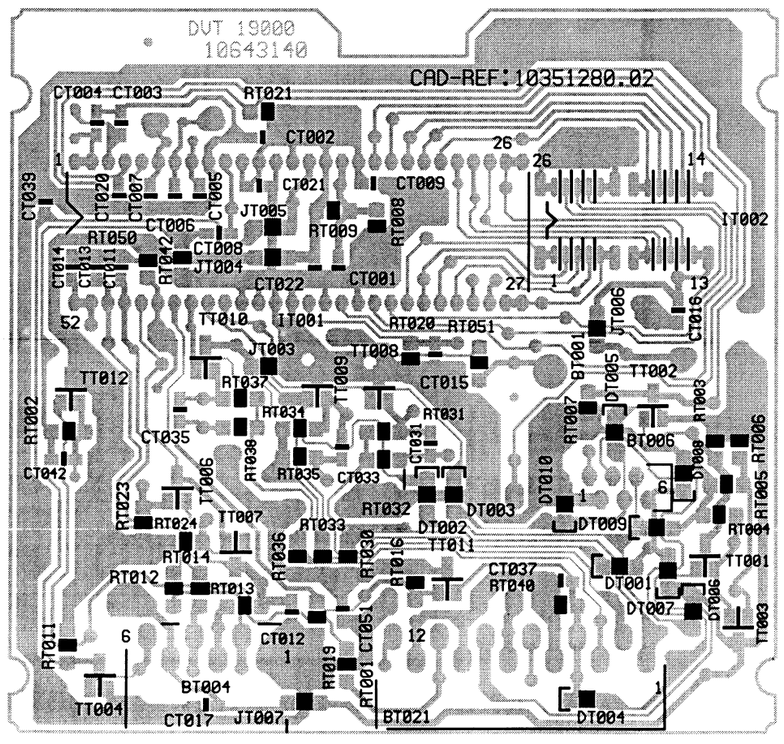

# TELETEXT MODULE - MODULE TELETEXTE - VIDEOTEXT MODUL - MODULO TELEVIDEO - MÓDULO TELETEXTO

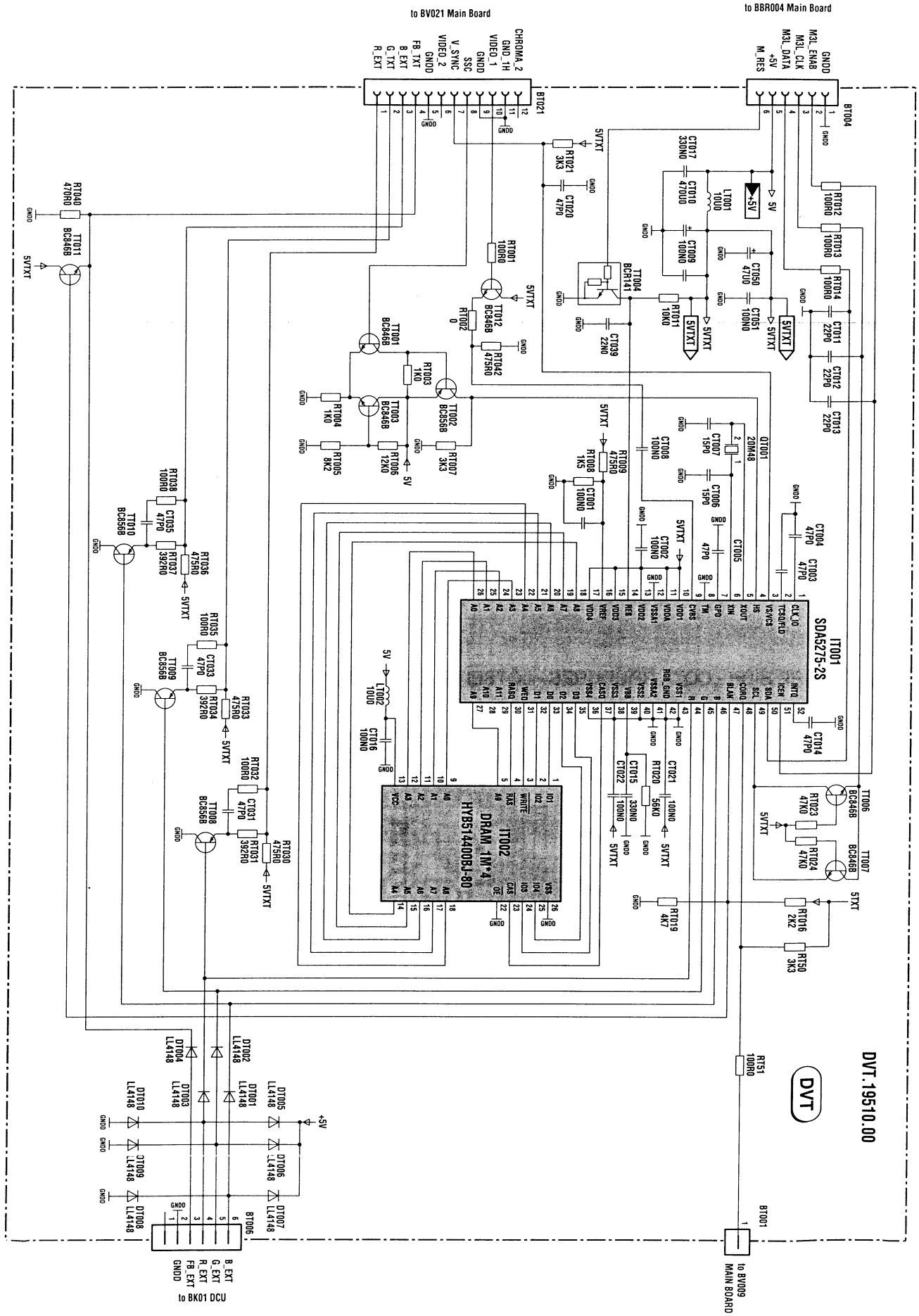

# RF - IF PART PIP - FEP 19100

COMPONENT SIDE - CÔTE COMPOSANTS - BESTÜCKUNGSSEITE - LATO COMPONENTI - LADO COMPONENTES

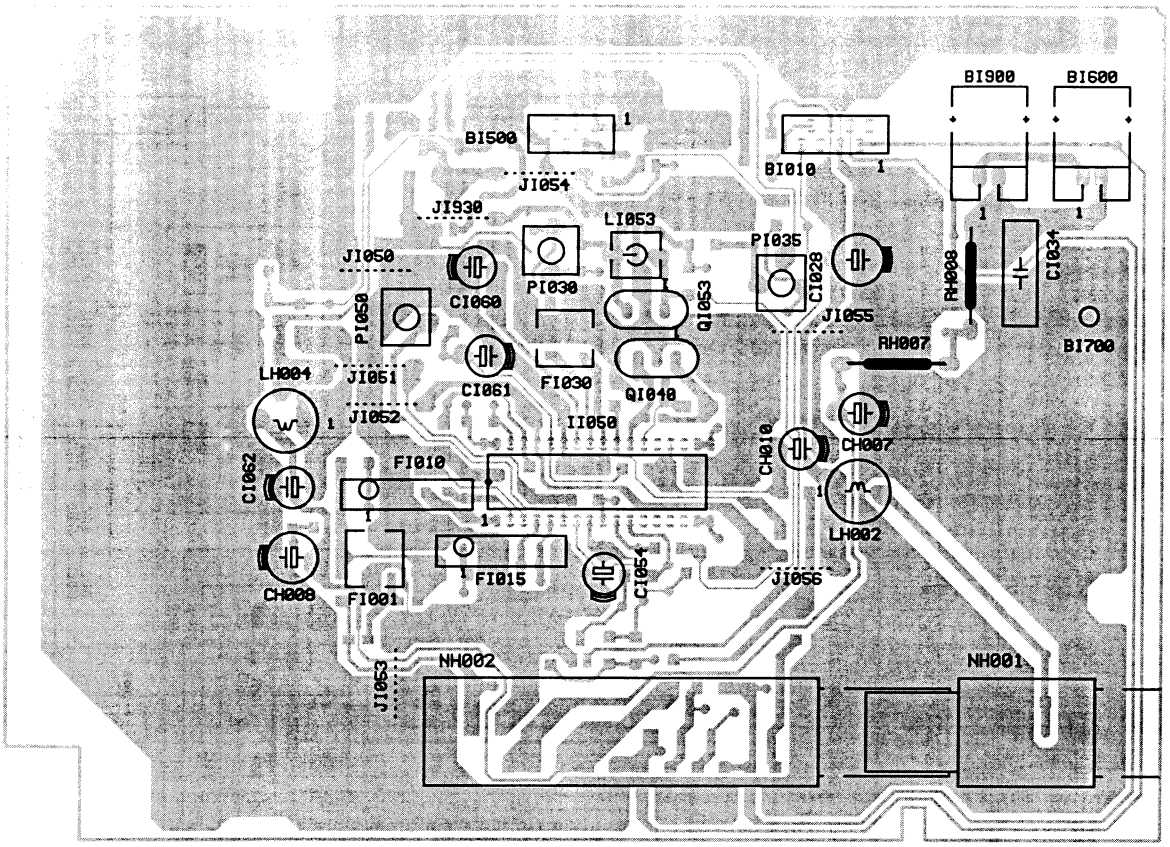


SOLDER SIDE - CÔTE SOUDURES - LÖTSEITE - LATO SALDATURE - LADO SOLDADURAS

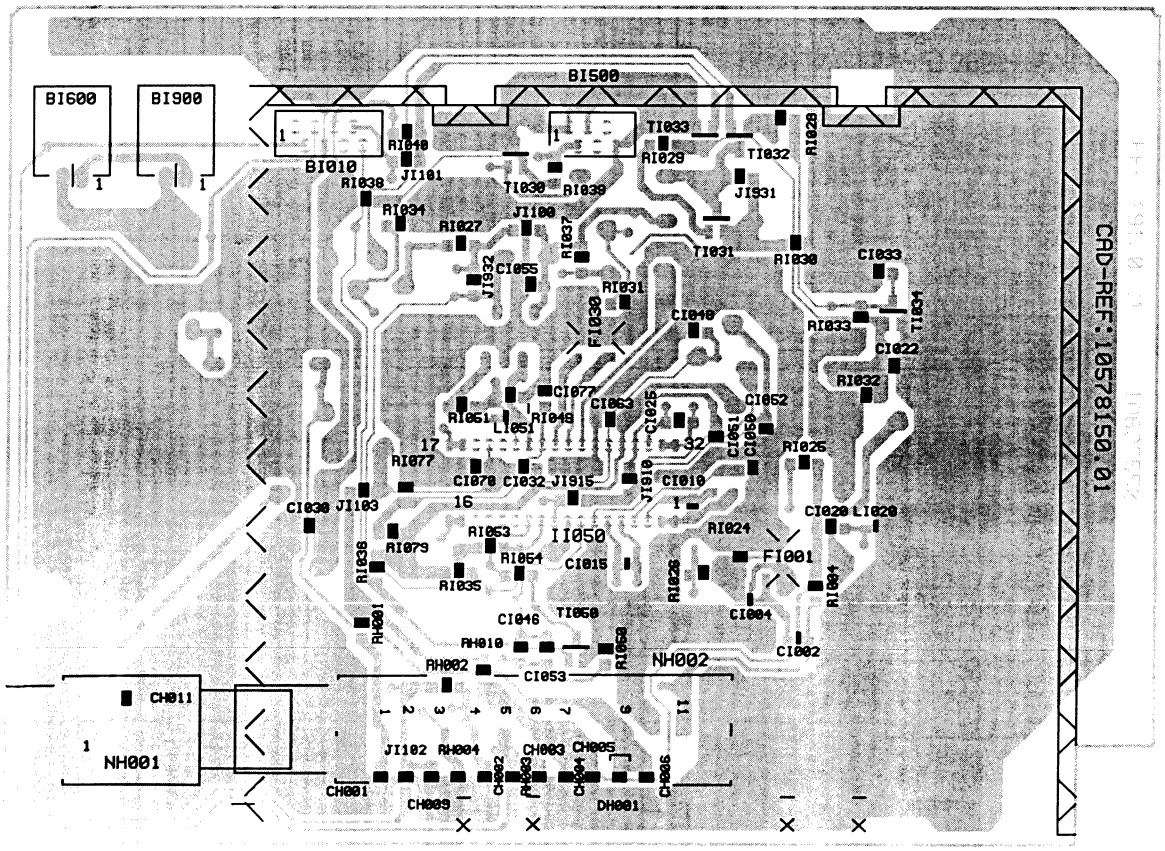

## FEP.19100.00

FEP

NH001

NH002
CTT 5010

ANT.IN
TV OUT
POWER SPLITTER
+5V GND

AGC NC AS CL DA +5V NC +30V NC IF

CH011 100N0
LH002 10U0
CH001 1N0
RH001 1K0
CH010 22U0
CH003 22P0
CH002 22P0
RH002 2K7
RH003 100R0
RH010 15K0
CH009 47P0
RH004 0
CH005 100N0
CH008 470U0
LH004 10U0
CH006 1N0
CH007 4U7
DH001 ZMM33
RH007 12K0
RH008 12K0
RI004 0
LI020 0
CI020 18P0
RI026 47R0
RI024 1K0

LI051 6U8
QI040 5M74
RI051 180R0
CI063 4N7
CI062 47U0
CI032 1U0
RI079 22K0
RI077 22K0
CI077 4N7
CI070 4N7
RI049 4K7
CI051 0
CI025 10N0
CI061 2U2
CI048 680N0
CI060 2U2
FI030
GND_IF

II050
TDA9811/N3
VI SIF VI SIF INSW1 Vp CVAGC GND CHP2 VCO2 VCO1 AFC VI Vid Vo Vid Vo CSS TAGC n.c. Mode
VI VIF VI VIF CBL VI VIF VI VIF TAD1 TPLL CSAGC STD Vo CVBS SW1 Vo AF n.c. n.c. n.c. n.c.

RI054 3K3
TI050 BCR141
CI050 100N0
FI015 OFWK3953M
CI015 4P7
CI046 100N0
CI053 100N0
RI050 330R0
PI050 22K0
CI052 4N7
JI915 0
RI053 220R0
JI932 0
CI055 39P0
JI930
JI931 0
RI035 4K7
CI030 10N0
RI038 1K0
RI039 10R0
TI030 BC856B
CI022 4N7
0 (Mod. Pos)
5 (Mod. Neg)
TI033 BCR141
RI032 1K0
6.6 (Mod. Pos)
0.1 (Mod. Neg)

BI500 To "SAT" SCI
6 GND
5
4
3 GND
2 CVBS
1 GND

PAL
T = 64µs
3Vpp-H
SECAM
T = 64µs
3Vpp-H

BI600 To BL052 Main Board
2
1

BI010 To BT010 DTP19010
1
2 I2C DA
3 I2C CLK
4 GND
5 +5V
6
7 OPA
8 OPB

CI028 100U0

L'
NORM

⚠ Sicherheitsbauteil
Bei Ersatz nur Originalteil verwenden
⚠ Safety Part
When repairing, use original part only
⚠ Piece de securite
N'utilisez que les pieces d'origine

| Variant BG/I/DKK'/L/L' | NORM OPA | L' OPB |
|---|---|---|
| BG/I DK/K' | L | L |
| L | H | L |
| L' | H | H |

# SCART INTERFACE MODULE - MODULE INTERFACE PERITELEVISION - SCART INTERFACE - MODULO PRESA PERITEL - MODULO EUROTOMA

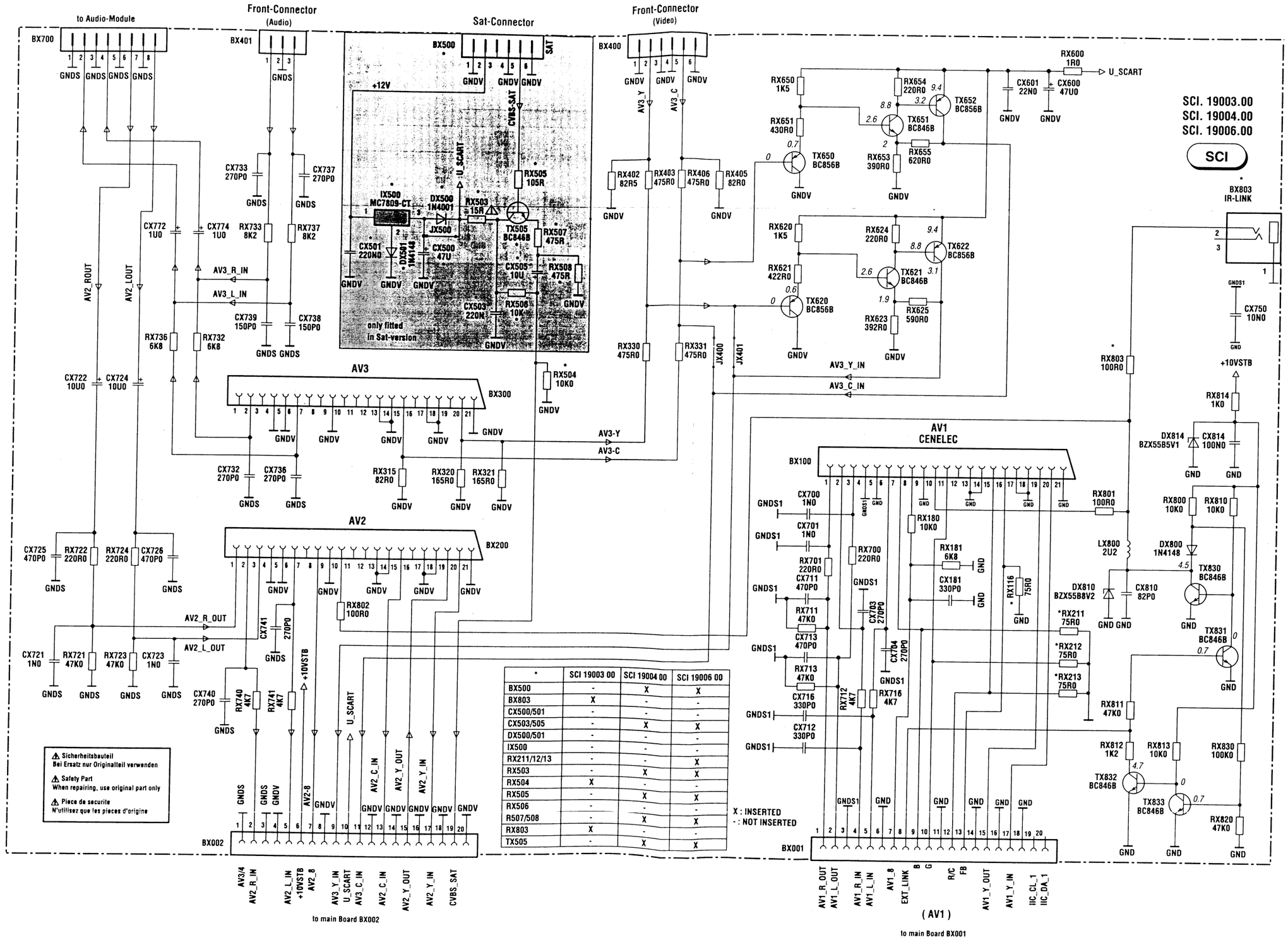


| * | SCI 19003 00 | SCI 19004 00 | SCI 19006 00 |
|---|---|---|---|
| BX500 | - | X | X |
| BX803 | X | - | - |
| CX500/501 | - | - | - |
| CX503/505 | - | X | X |
| DX500/501 | - | - | - |
| IX500 | - | - | - |
| RX211/12/13 | - | - | X |
| RX503 | - | X | X |
| RX504 | X | - | - |
| RX505 | - | X | X |
| RX506 | - | - | - |
| R507/508 | - | X | X |
| RX803 | X | - | - |
| TX505 | - | X | X |

X : INSERTED
- : NOT INSERTED

⚠ Sicherheitsbauteil
Bei Ersatz nur Originalteil verwenden

⚠ Safety Part
When repairing, use original part only

⚠ Piece de securite
N'utilisez que les pieces d'origine

COMPONENT SIDE - COTE COMPOSANTS - BESTÜCKUNGSSEITE
LATO COMPONENTI - LADO COMPONENTES

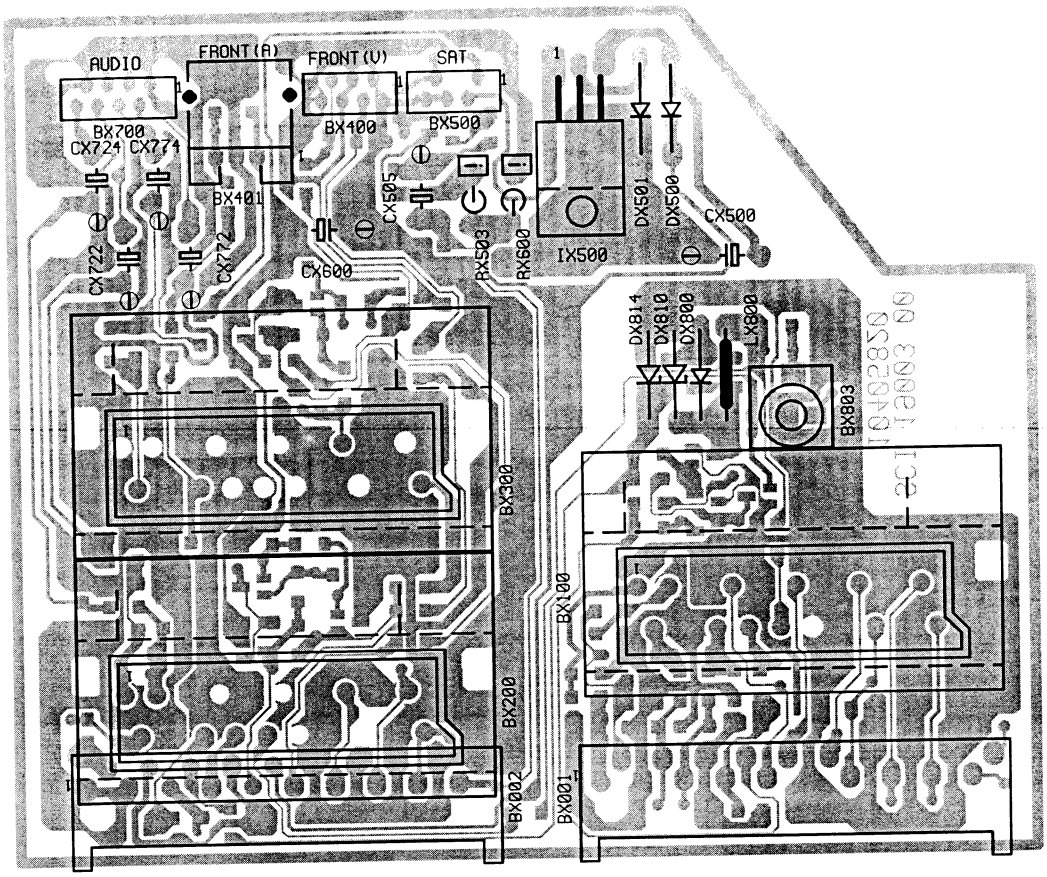


SOLDER SIDE - CÔTE SOUDURES - LÖTSEITE - LATO SALDATURE - LADO SOLDADURAS

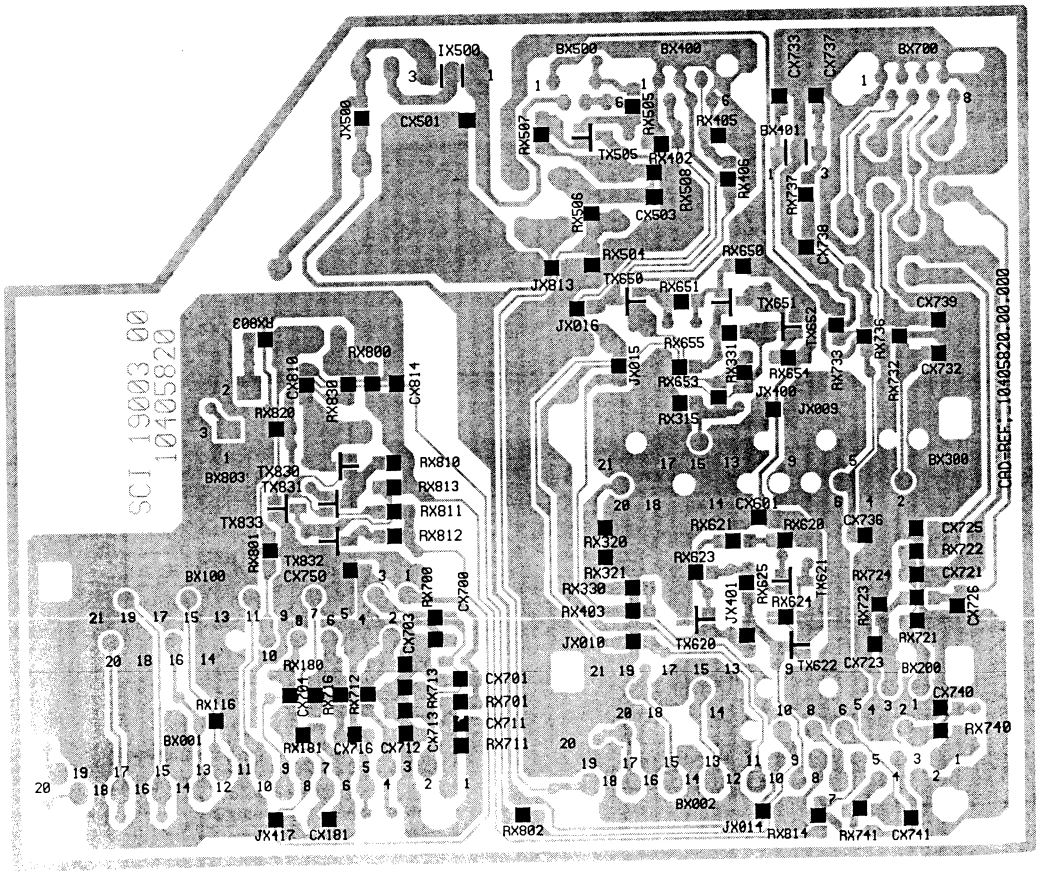

# PS RP19 01

COMPONENT SIDE - COTE COMPOSANTS - BESTÜCKUNGSSEITE
LATO COMPONENTI - LADO COMPONENTES

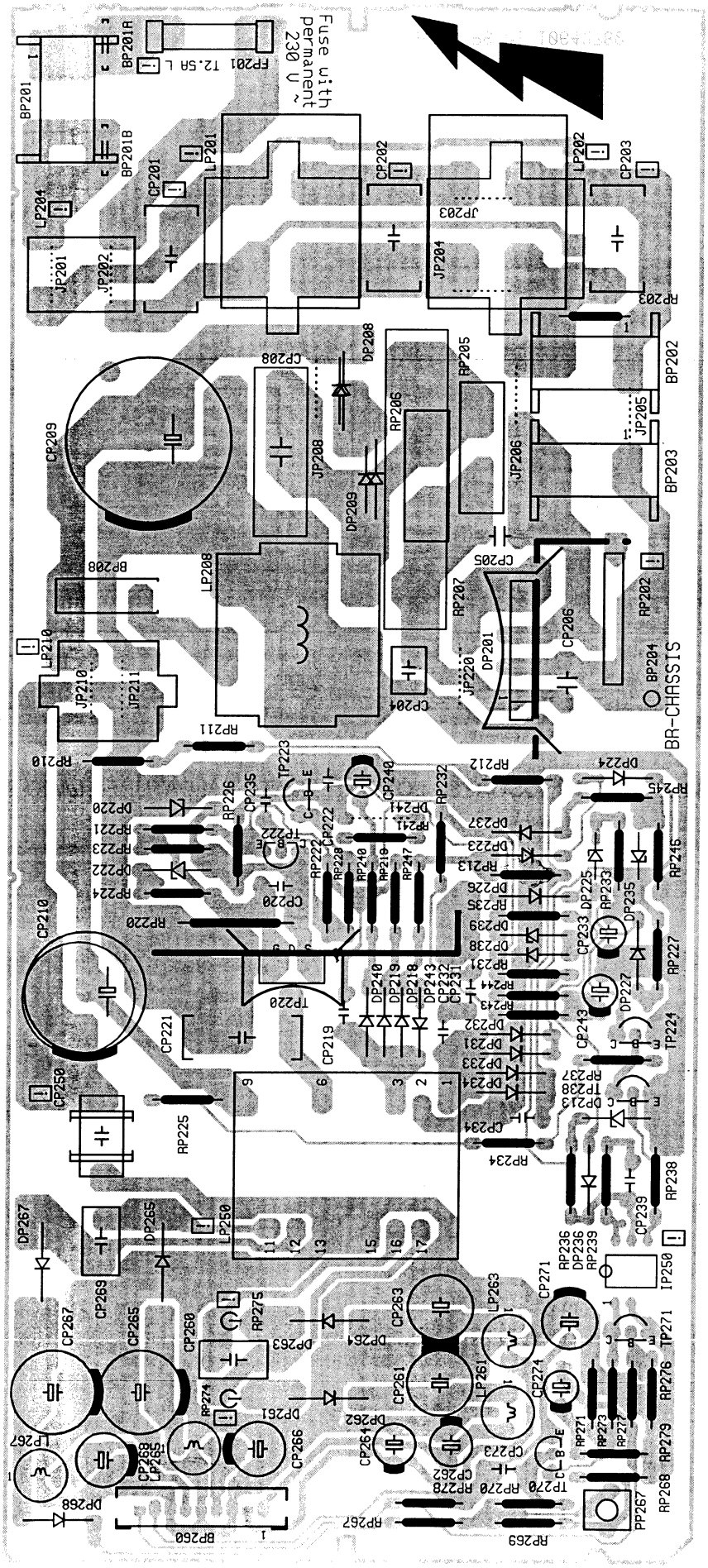

# PS RP19 01

SOLDER SIDE - CÔTE SOUDURES - LÖTSEITE - LATO SALDATURE - LADO SOLDADURAS

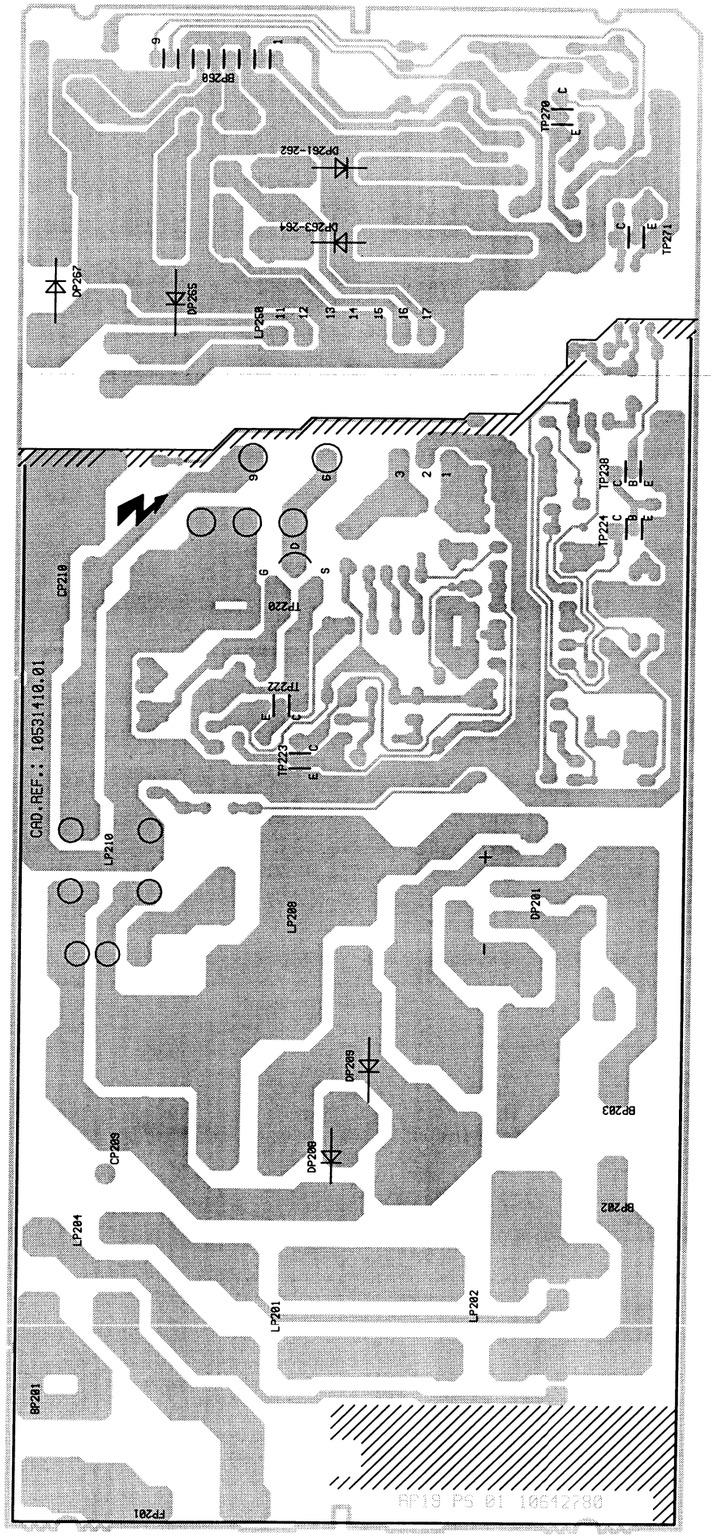


# DIGITAL CONVERGENCE UNIT POWER SUPPLY - ALIMENTATION PLATINE DE CONVERGENCE
# ALIMENTAZIONE CONVERGENZA DIGITALE - ALIMENTACIÓN DE LA UNIDAD DE CONVERGEN

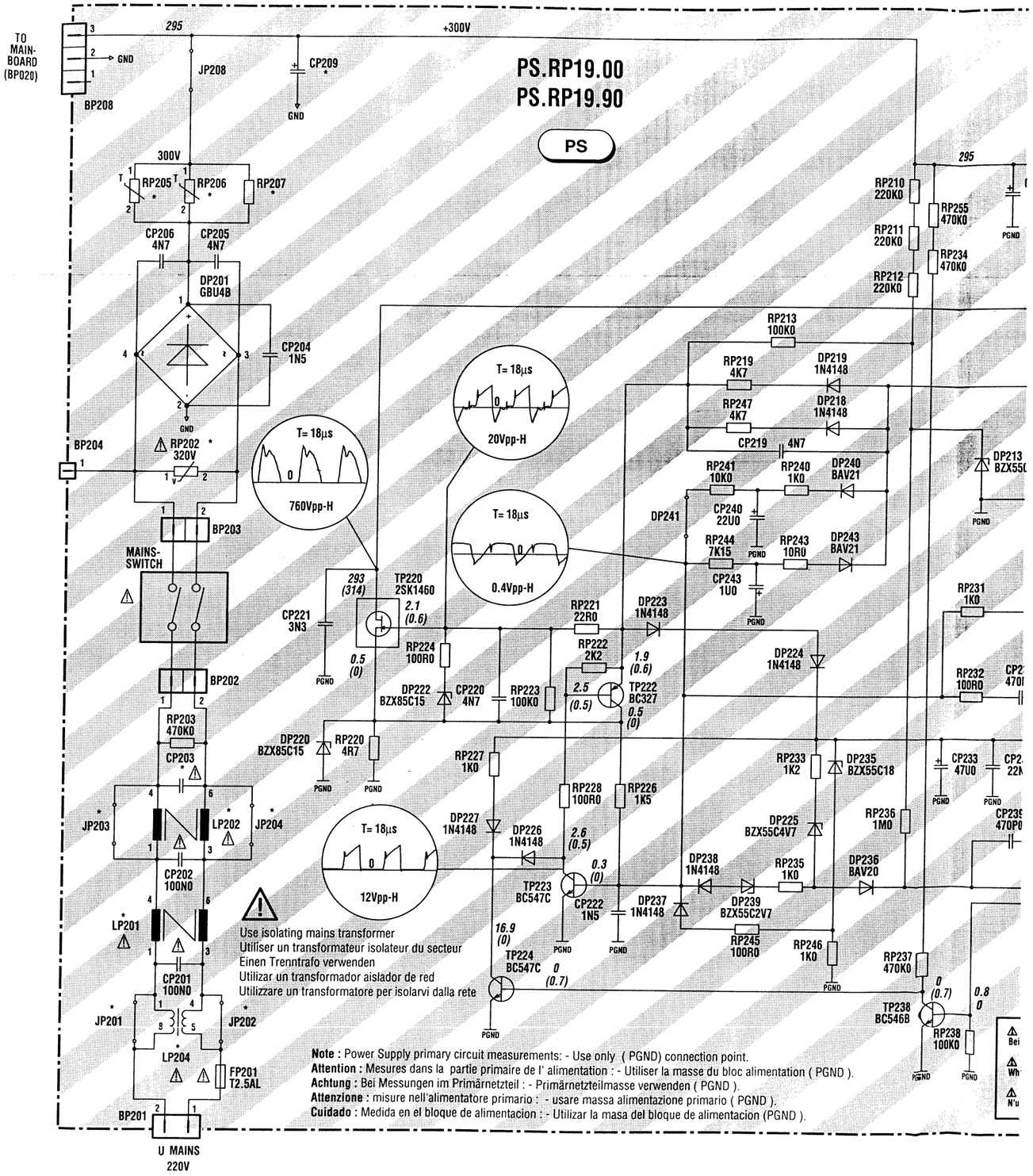

# DIGITAL CONVERGENCE UNIT POWER SUPPLY - ALIMENTATION PLATINE DE CONVERGENCES NUMERIQUES - DIGITAL CONVERGENCE UNIT NETZTEIL - ALIMENTAZIONE CONVERGENZA DIGITALE - ALIMENTACIÓN DE LA UNIDAD DE CONVERGENCIA DIGITAL

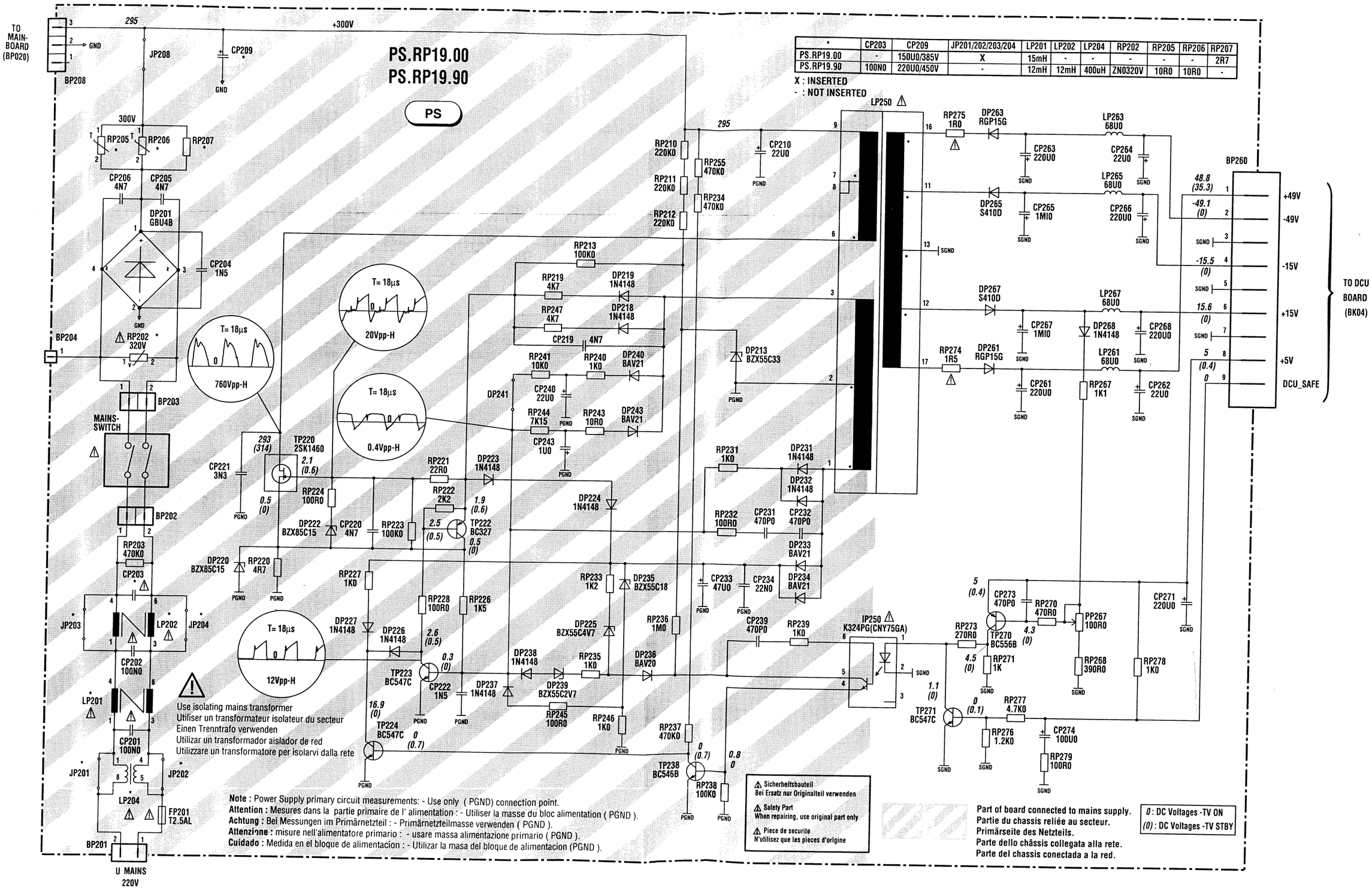


| * | CP203 | CP209 | JP201/202/203/204 | LP201 | LP202 | LP204 | RP202 | RP205 | RP206 | RP207 |
|---|---|---|---|---|---|---|---|---|---|---|
| PS.RP19.00 | - | 150U0/385V | X | 15mH | - | - | - | - | - | 2R7 |
| PS.RP19.90 | 100N0 | 220U0/450V | - | 12mH | 12mH | 400uH | ZN0320V | 10R0 | 10R0 | - |

X : INSERTED
- : NOT INSERTED

# AUDIO SIGNAL MODULE DOLBY PROLOGIC - MODULE AUDIO DOLBY PROLOGIC - DOLBY PROLOGIC BAUSTEIN - MODULO AUDIO DOLBY PROLOGIC - MODULO AUDIO DOLBY PROLOGIC

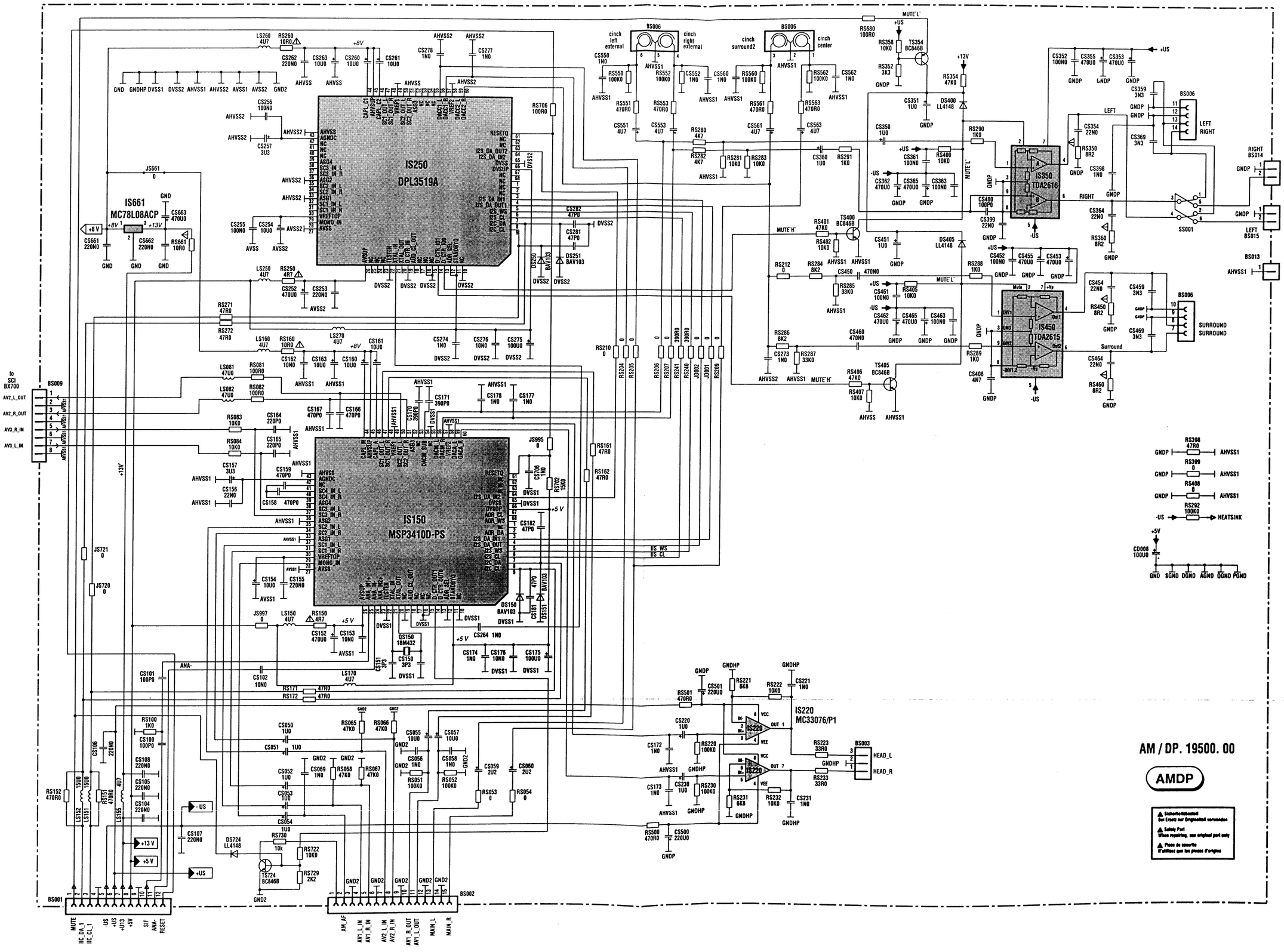

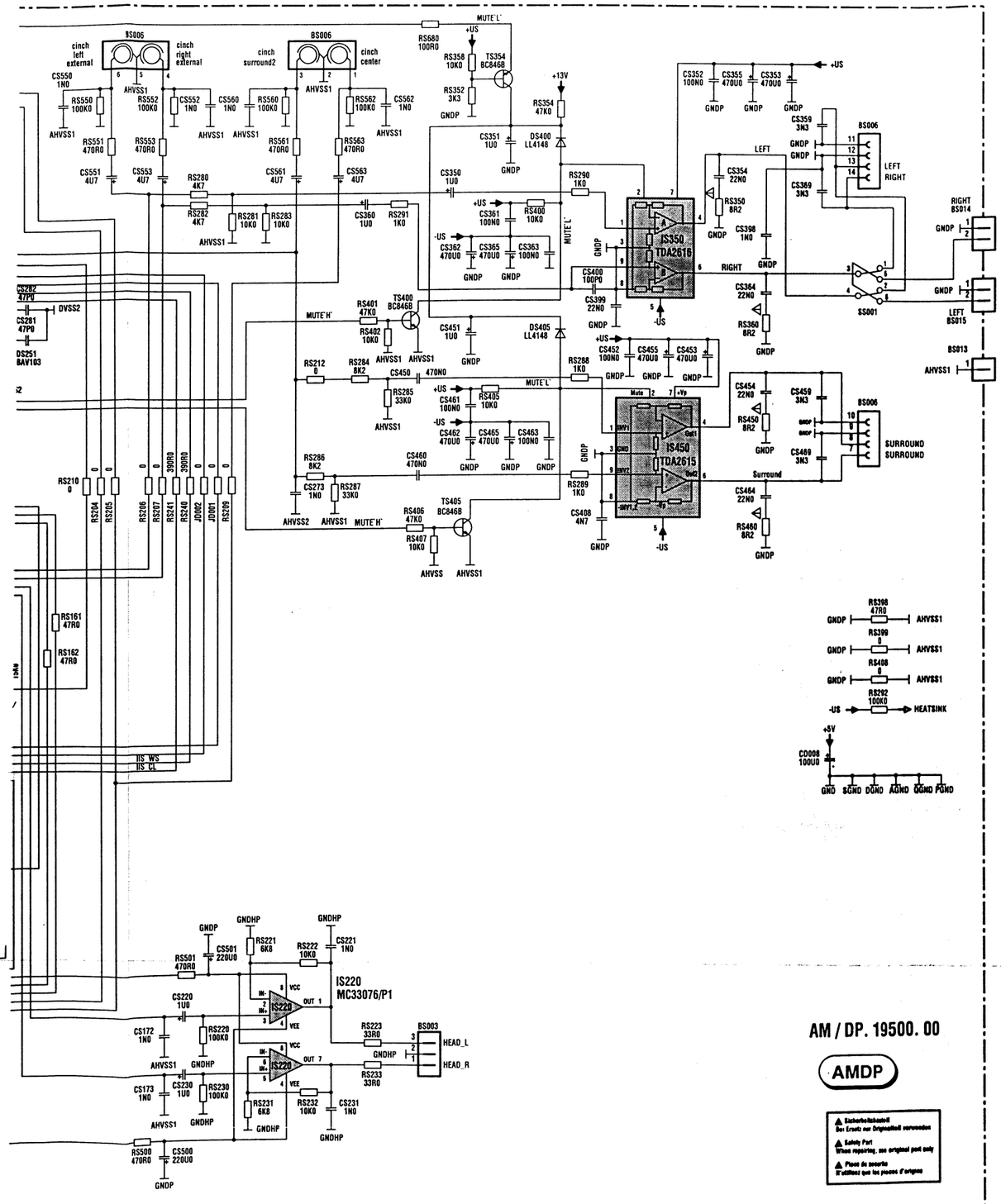




## AM / DP 19500

COMPONENT SIDE - COTE COMPOSANTS - BESTÜCKUNGSSEITE
LATO COMPONENTI - LADO COMPONENTES

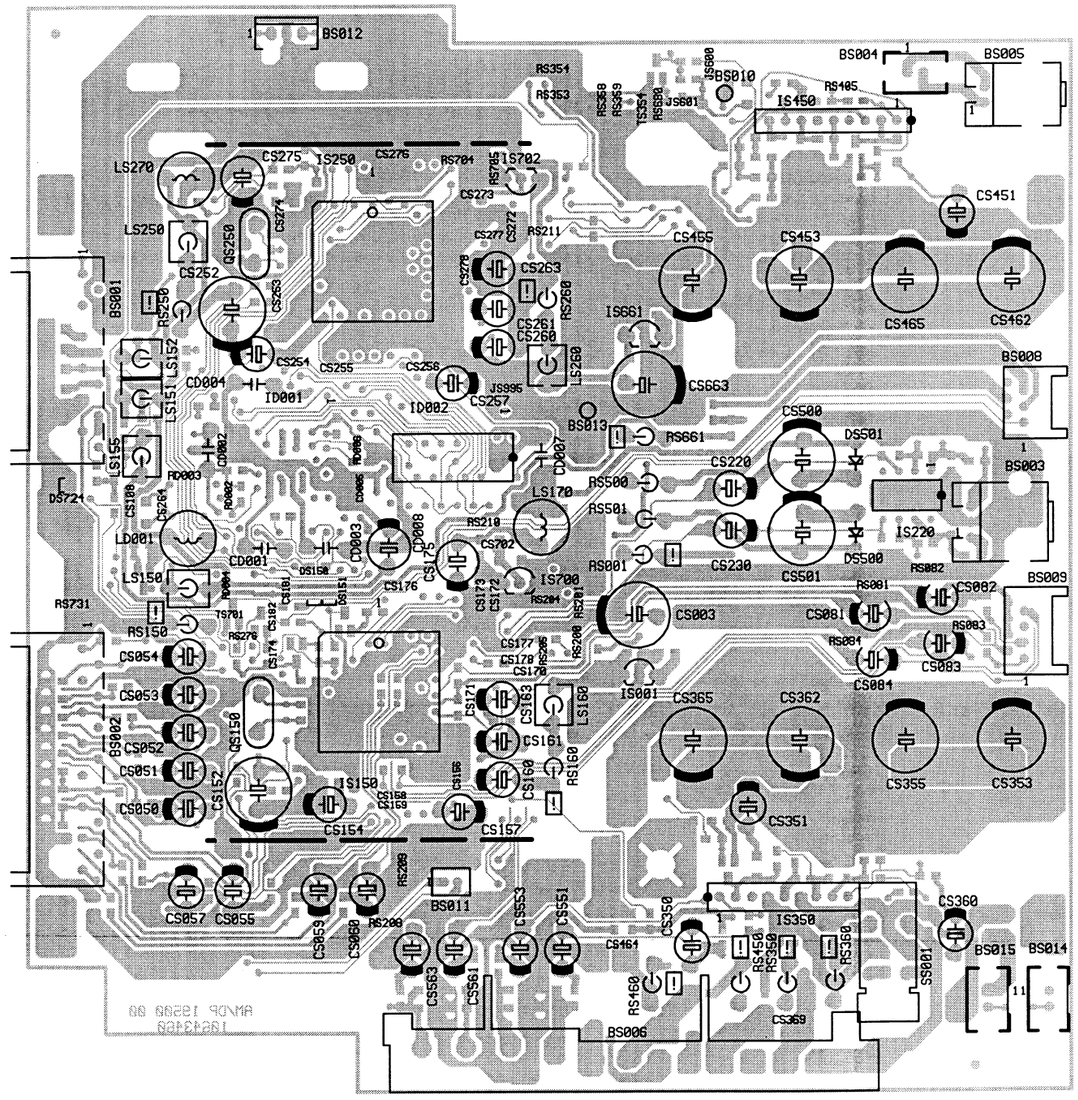

# AM / DP 19500

SOLDER SIDE - CÔTE SOUDURES - LÖTSEITE - LATO SALDATURE - LADO SOLDADURAS

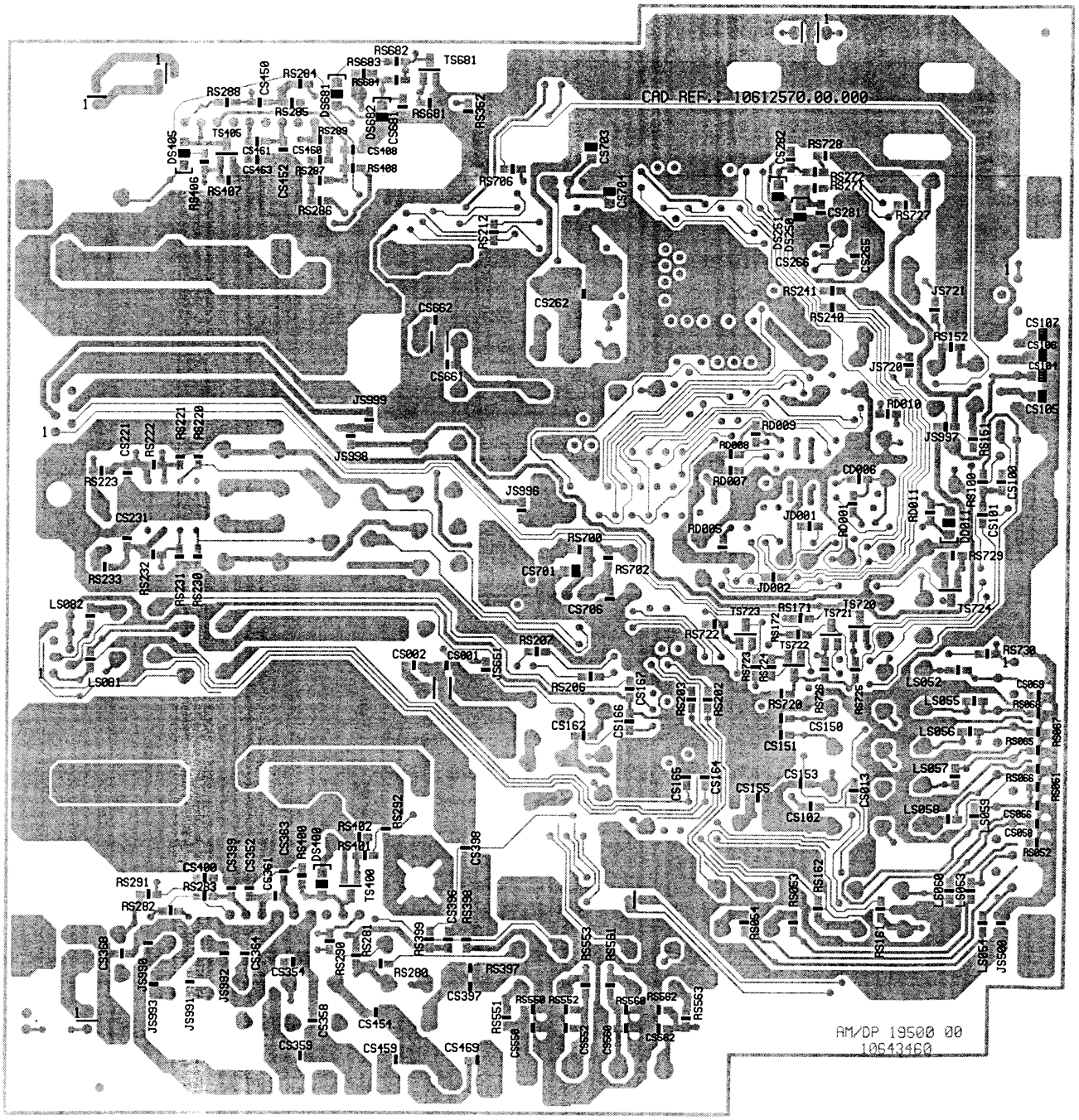

# VHF / UHF TUNER CTT5010

( For information only )

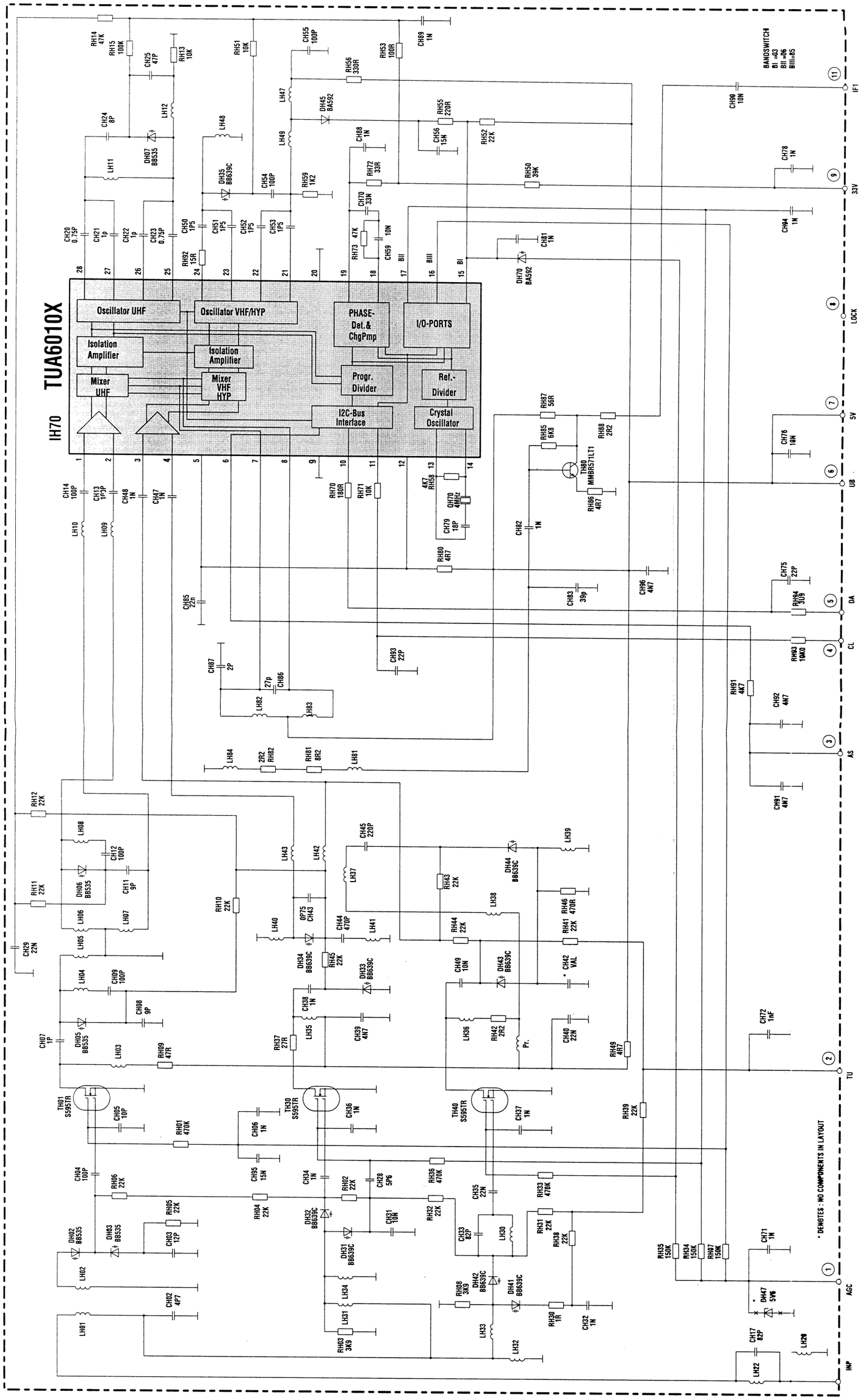

# FRONT CONNECTOR BOARD - PRISES EN FACADE ET INTERCONNEXION DU CLAVIER - FRONT ANSCHLUSSPLATTE - PIASTRA CONNESSIONE FRONTALE - PLÁTINA MANDOS FRONTAL

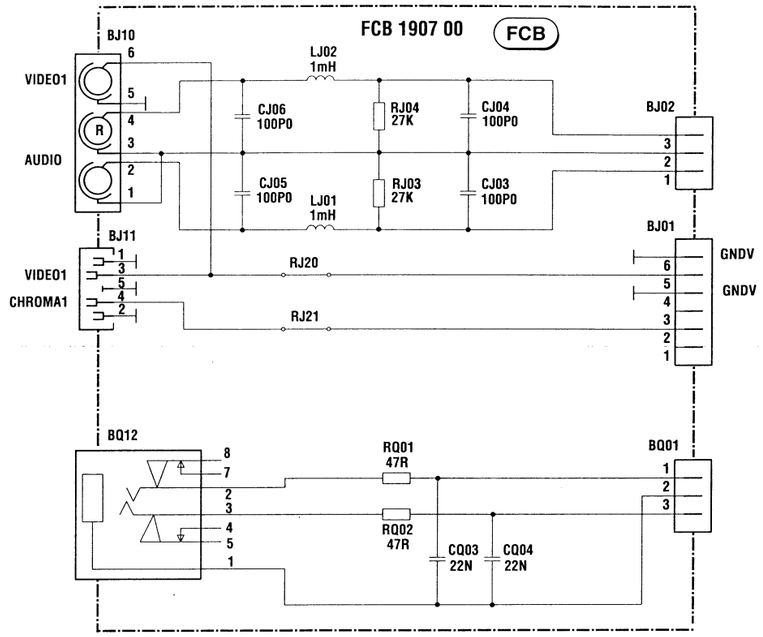


COMPONENT SIDE - COTE COMPOSANTS - BESTÜCKUNGSSEITE - LATO COMPONENTI - LADO COMPONENTES

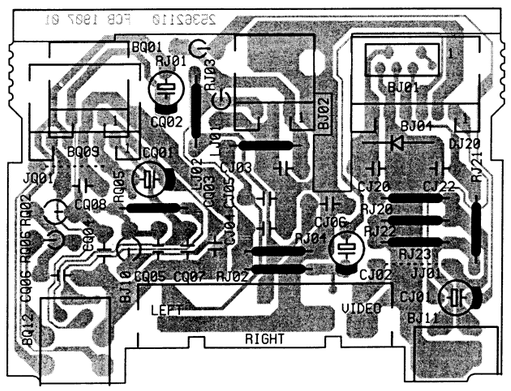

SOLDER SIDE - CÔTE SOUDURES - LÖTSEITE - LATO SALDATURE - LADO SOLDADURAS

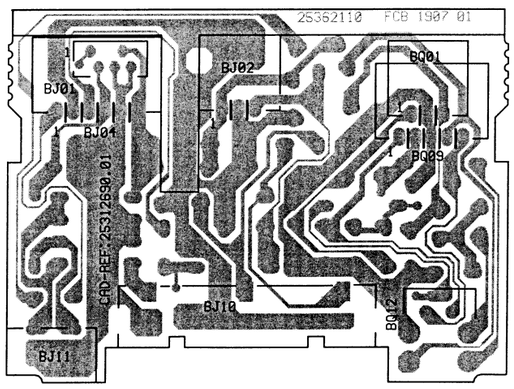




# IR RECEIVER P.C.B. - PLATINE RECEPTEUR INFRA-ROUGE - IR EMPFÄNGER LTPL. PIASTRA RICEVITORE IR - PLATINA RECEPTOR IR

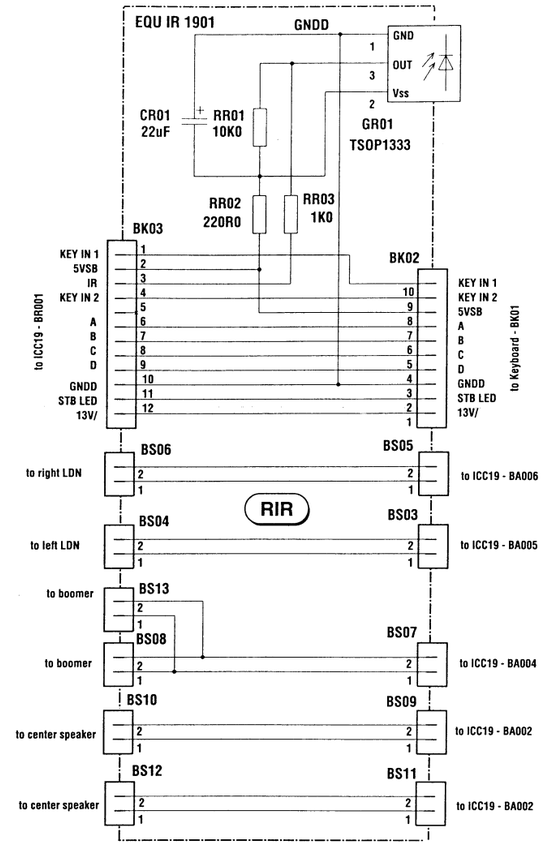


COMPONENT SIDE - COTE COMPOSANTS - BESTÜCKUNGSSEITE - LATO COMPONENTI - LADO COMPONENTES

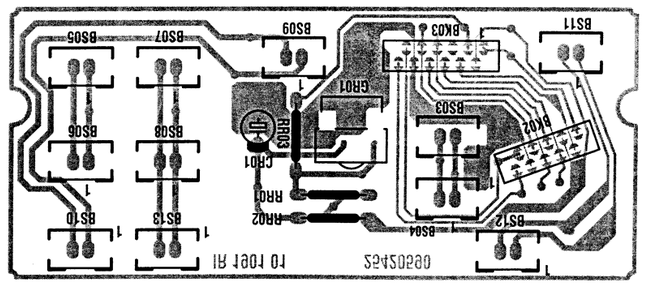

SOLDER SIDE - CÔTE SOUDURES - LÖTSEITE - LATO SALDATURE - LADO SOLDADURAS

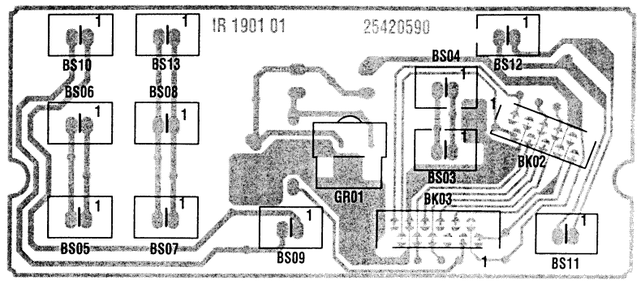

# KEYBOARD MODULE - PLATINE CLAVIER - TASTATURPLATTE - PIASTRA COMANDI - PLATINA TECLADO

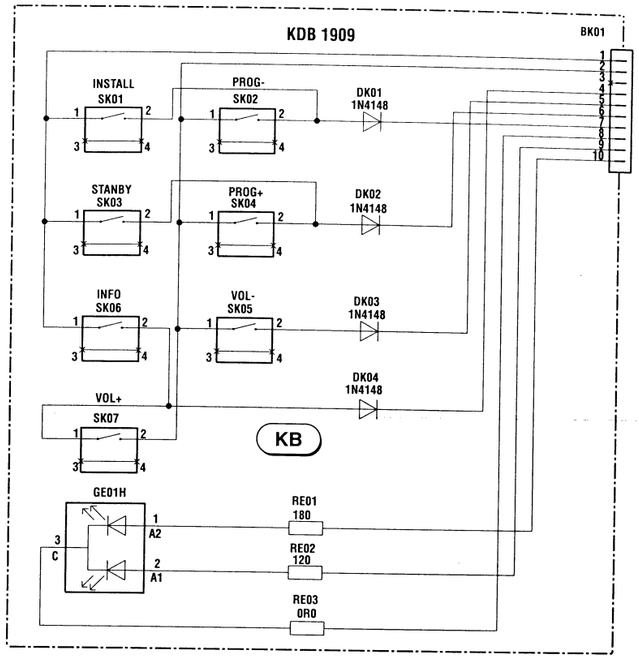


## LDN 1907

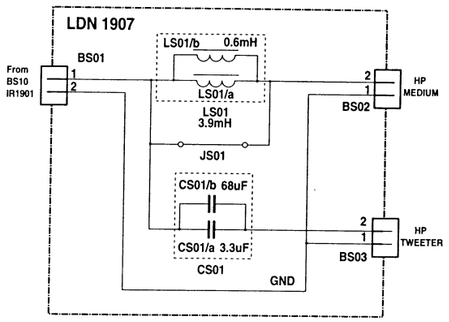


# INTEGRATED CIRCUITS BLOCK DIAGRAMS - SYNOPTIQUES INTERNES DES CIRCUITS INTEGRES - INTEGRIERTE SCHALTUNGEN BLOCKSCHALTBILDER - SCHEMA A BLOCCHI DEI CIRCUITI INTEGRATI - VISTA INTERNA DE LOS CIRCUITOS INTEGRADOS

### IY004 - SDA9189

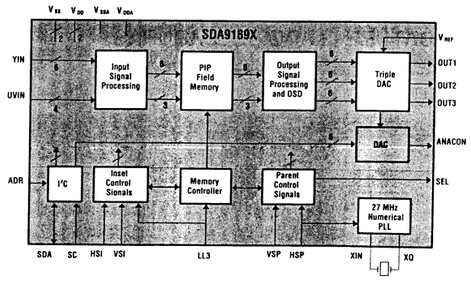


### IV300 - TDA8755

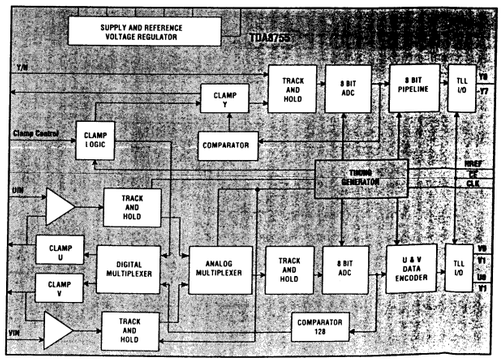




### IV601 - TDA9143N

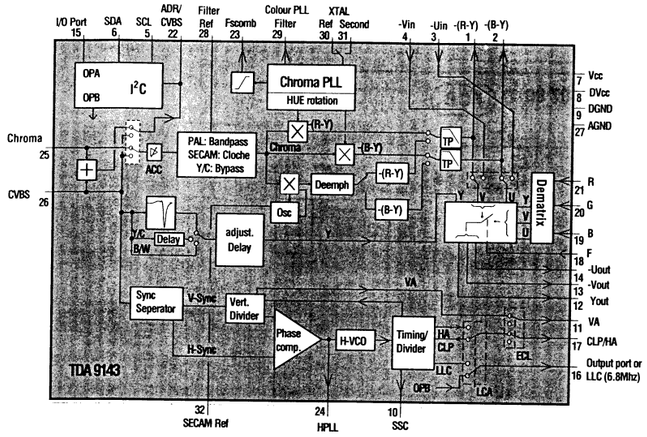


### IY005 - TDA8601

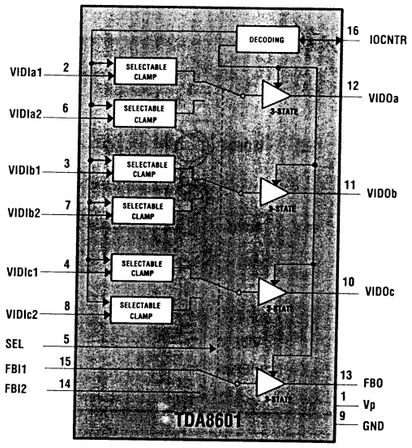


# INTEGRATED CIRCUITS AND TRANSISTORS OUTLINE - CIRCUITS INTEGRES ET TRANSISTORS INTEGRIERTE SCHALTUNGEN UND TRANSISTOREN - CIRCUITI INTEGRATI TRANSISTOR CIRCUITOS INTEGRADOS Y TRANSISTORES

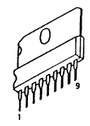

TDA 8139

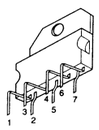

TDA 8177

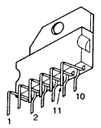

TDA7269

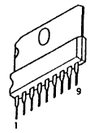

TEA 5101B

4N25TV

K324PG
M24C32BNI
MC7805CT
MC78C12CT
ST24C04-B1
TDA4605
X24164

TL084C

STV2145

TEA6415C

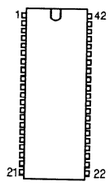

TDA9811

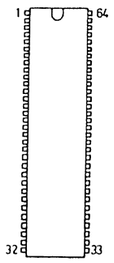

MPS3400
MPS3410

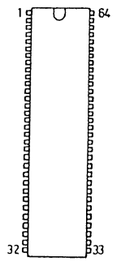

MPS3400
MPS3410

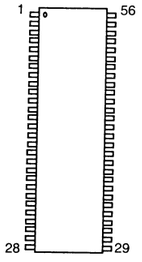

STV2162

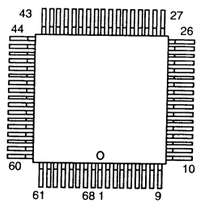

ST90R92

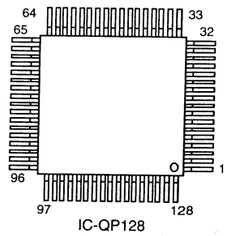

IC-QP128

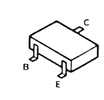

BCR141- BC846B
BC 847B-BC856B
BC857B-BF 799
BC 848 A/B/C

BC368
BF421
BF422
BF423

BC327
BC 337
BC546B
BC547B
BC 548B
BC557B
BC 558B

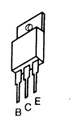

2SA1837
2SC4793
2SC3675
BD 241
TIP122

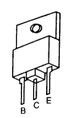

BUL810TH
BUV48CFITH16
BW93CFI
BW94CFI
ON4977

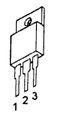

7805
7812
L7912CV

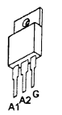

BT806 -600C

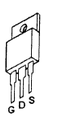

STP6 NA60F1
2SK1460

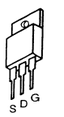

TR03-400T

# LIST OF ABBREVIATIONS - LISTE DES ABREVIATIONS - ABKÜRZUNGEN
# LISTA DELLE ABBREVIAZIONI - LISTA DE ABREVIACIONES

- **AV_R_ OUT** Audio Right-Out
- **AV_I_ OUT** Audio Left-Out
- **AV_R_ IN** Audio Right-In
- **AV_L_ IN** Audio Left-In
- **AV_C_ IN** Chroma-In
- **AV_Y_ IN** Video-In
- **AV_Y_ OUT** Video-Out
- **AV1_8** Pin-8 Detector
- **BEAM_INFO** BEAM CURRENT INFORMATION
- **BCL** BEAM CURRENT LIMITER
- **BG INFO** SWITCH BG
- **B_AV** BLUE SIGNAL FROM AV
- **BHD** BLUE HORIZONTAL DRIVE
- **BHR** BLUE HORIZONTAL REFERENCE
- **BIAG** BIAS GAMMA
- **B_TXT** BLUE SIGNAL FROM (TEXT OR PIP)
- **BVD** BLUE VERTICAL DRIVE
- **BVR** BLUE VERTICAL REFERENCE
- **CHROMA_2** CHROMA INPUT FROM PIP PICTURE
- **CRT_B** BLUE SIGNAL TO VIDEO AMPLIFIER
- **CRT_G** GREEN SIGNAL TO VIDEO AMPLIFIER
- **CRT_R** RED SIGNAL TO VIDEO AMPLIFIER
- **CVBS_SAT** SAT_VIDEO
- **DCR** DARK CURRENT SIGNAL OUTPUT
- **DEGAUSS** DEGAUSS SIGNAL
- **E.W_DRIVE** EAST - WEST DRIVE SIGNAL
- **EW_BACK** FEED BACK INFORMATION
- **FB_AV** FAST BLANK SIGNAL FROM AV SCART
- **FB DETEC** FAST BLANKING DETECT
- **FB_TXT** FAST BLANK SIGNAL (TEXT OR PIP)
- **FIL1** HEATER GROUND
- **FIL2** HEATER (6.3V RMS)
- **FOC** FOCUS
- **FRAME _DR** VERTICAL DEFLECTION DRIVE SIGNAL
- **G_AV** GREEN SIGNAL FROM AV
- **GHD** GREEN HORIZONTAL DRIVE
- **GHR** GREEN HORIZONTAL REFERENCE
- **GND** GROUND (0V)
- **GVD** GREEN VERTICAL DRIVE
- **GVR** GREEN VERTICAL REFERENCE
- **G_TXT** GREEN SIGNAL (TEXT OR PIP)
- **G2** G2 SUPPLY (+900V)
- **HDEFL1/2** HORIZONTAL DEFLECTION
- **H-BLUE** BLUE HORIZONTAL DEFLECTION
- **HDFL** HORIZONTAL SYNC.
- **HDRV** HORIZONTAL DEFLECTION DRIVE SIGNAL
- **H-GREEN** GREEN HORIZONTAL DEFLECTION
- **H-RED** RED HORIZONTAL DEFLECTION
- **HTR1 / HTR2** HEATER OUTPUT FROM THE DST TO CRT
- **I CUT** CUT OFF CURRENT
- **IIC-CL-1** I2C CLOCK BUS 1
- **IIC-CL-2** I2C CLOCK BUS 2
- **IIC-DA-1** I2C DATA BUS 1
- **IIC-DA-2** I2C DATA BUS 2
- **IR** INFRARED RECEIVER
- **L1_INFO** STANDARD L BAND 1
- **LDFL** LINE LOCKED CLOCK 27 MHz
- **LDR** LED DISPLAY
- **MAIN _Y** Y FROM CHROMA DECODER
- **MAIN _U** U FROM CHROMA DECODER
- **MAIN _V** V FROM CHROMA DECODER
- **M-RES** MASTER RESET TO MICROPROCESSOR
- **MUTE** MUTES AUDIO AMPLFIERS
- **NMI** NON MASKABLE INTERRUPT ( alternate function of Pin 55 STR092)
- **NORM** SWITCH POLARITY OF THE VIDEO SIGNAL TUNER
- **PLL-ON** ENABLE DEFLECTION PLL
- **PKS** SIGNAL FOR ABL CIRCUIT (STV2161/STV2162)
- **R_AV** RED SIGNAL FROM AV
- **RHD** RED HORIZONTAL DRIVE
- **RHR** RED HORIZONTAL REFERENCE
- **RJR** RED VERTICAL REFERENCE
- **RVD** RED VERTICAL DRIVE
- **R_TXT** RED SIGNAL OUTPUT (TEXT OR PIP)
- **SAFE** SAFETY INFORMATION FROM DEFLECTION
- **SMPS_IN** FEED BACK SIGNAL FOR POWER SUPPLY REGULATION (STV2161/2)
- **SSC** SUPERSAND CASTEL PULSE
- **TEMP_ABL** SIGNAL DST-TEMPERATURE SENSING CIRCUIT
- **T1_CVBS** COMPOSITE VIDEO BASEBAND FROM TUNER
- **U_SCART** SCART VOLTAGE
- **+USYS** SYSTEM VOLTAGE
- **+/- US** SOUND VOLTAGE
- **+UVERT** VERTICAL VOLTAGE
- **+UVFB** VERTICAL RETRACE VOLTAGE
- **+UVIDEO** VIDEO VOLTAGE FOR THE CRT BOARD
- **VA** VERTICAL REFERENCE OUT FROM TDA 9143
- **VDFL** VERTICAL SYNC.
- **VIDEO_1** VIDEO INPUT FROM MAIN PICTURE
- **VIDEO_2** VIDEO INPUT FROM PIP PICTURE
- **V-BLUE** BLUE VERTICAL DEFLECTION
- **V-GREEN** GREEN VERTICAL DEFLECTION
- **V-RED** RED VERTICAL DEFLECTION
- **V-SYNC** VERTICAL SYNC.FOR TELETEXT MODULE
- **5 V** 5V POWER SUPPLY
- **13 V** 12V POWER SUPPLY
- **5 VSTBY** 5V STAND BY
- **10 VSTBY** 10V STAND BY